An Oshkosh Corporation Company

Service and Maintenance Manual

Models
25AM
30AM
38AM

PVC 2002

31215808

March 16, 2021 - Rev B

ANSI

AS/NZS

SECTION A. INTRODUCTION - MAINTENANCE SAFETY PRECAUTIONS

A GENERAL

This section contains the general safety precautions which must be observed during maintenance of the mobile elevating work platform. It is of utmost importance that maintenance personnel pay strict attention to these warnings and precautions to avoid possible injury to themselves or others, or damage to the equipment. A maintenance program must be followed to ensure that the machine is safe to operate.

WARNING

MODIFICATION OF THE MACHINE WITHOUT APPROVAL BY JLG INDUSTRIES, INC. IS A SAFETY VIOLATION.

The specific precautions to be observed during maintenance are inserted at the appropriate point in the manual. These precautions are, for the most part, those that apply when servicing hydraulic and larger machine component parts.

Your safety, and that of others, is the first consideration when engaging in the maintenance of equipment. Always be conscious of weight. Never attempt to move heavy parts without the aid of a mechanical device. Do not allow heavy objects to rest in an unstable position. When raising a portion of the equipment, ensure that adequate support is provided.

WARNING

SINCE THE MACHINE MANUFACTURER HAS NO DIRECT CONTROL OVER THE FIELD INSPECTION AND MAINTENANCE, SAFETY IN THIS AREA IS THE RESPONSIBILITY OF THE OWNER/OPERATOR.

B HYDRAULIC SYSTEM SAFETY

It should be noted that the machine's hydraulic systems operate at extremely high potentially dangerous pressures. Every effort should be made to relieve any system pressure prior to disconnecting or removing any portion of the system.

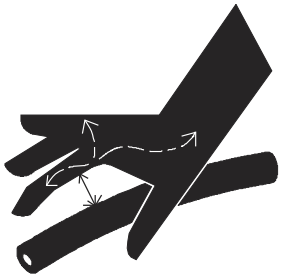

Relieve system pressure by cycling the applicable control several times with the engine stopped and ignition on, to direct any line pressure back into the reservoir. Pressure feed lines to system components can then be disconnected with minimal fluid loss.

C MAINTENANCE

WARNING

FAILURE TO COMPLY WITH SAFETY PRECAUTIONS LISTED IN THIS SECTION MAY RESULT IN MACHINE DAMAGE, PERSONNEL INJURY, OR DEATH, AND IS A SAFETY VIOLATION.

- Remove all rings, watches and jewelry when performing any maintenance.
- Do not wear long hair unrestrained, or loose-fitting clothing and neckties which are apt to become caught on or entangled in equipment.
- Observe and obey all warnings and cautions on machine and in service manual.
- Keep standing surfaces and hand holds free of oil, grease, water, etc.
- Never work under an elevated platform until it has been safely restrained from any movement by blocking or overhead sling, or the safety prop has been engaged.
- Before making adjustments, lubricating or performing any other maintenance, shut off all power controls.
- Battery should always be disconnected during replacement of electrical components.
- Keep all support equipment and attachments stowed in their proper place.
- Use only approved, nonflammable cleaning solvents.

REVISON LOG

Original Issue A - February 25, 2020

Revised B - March 16, 2021

SECTION NO.	TITLE	PAGE NO.
SECTION A - INTRODUCTION - MAINTENANCE SAFETY PRECAUTIONS		
A	General	1-1
B	Hydraulic System Safety	1-1
C	Maintenance	1-1
SECTION 1 - GENERAL SPECIFICATIONS		
1.1	Operating Specifications	1-1
	Machine Specifications	1-1
1.2	Electrical Specifications	1-1
1.3	Battery Specifications	1-1
1.4	Performance Data	1-2
	Platform Data	1-2
1.5	Machine Component Weights	1-2
1.6	Serial Number Plate Locations	1-2
1.7	Torque Requirements	1-2
1.8	Lubrication	1-2
	Hydraulic Oil (HO)	1-2
	Lubrication Specifications	1-3
1.9	Battery Maintenance	1-4
1.10	Hydraulic Pressure Adjustment	1-4
1.11	Cylinder Specifications	1-5
1.12	threadlocking Compound	1-6
1.13	Torque Charts	1-7
	SAE Fastener Torque Chart	1-7
	Metric Fastener Torque Chart	1-13
SECTION 2 - SERVICE PROCEDURES		
2.1	Machine Preparation, Inspection, And Maintenance	2-1
	General	2-1
	Preparation, Inspection, and Maintenance	2-1
	Pre-Start Inspection	2-1
	Pre-Delivery Inspection and Frequent Inspection	2-1
	Annual Machine Inspection	2-1
	Preventative Maintenance	2-1
2.2	Preventive Maintenance and Inspection Schedule	2-2
	Maintenance and Inspection Schedule Codes	2-2
	Footnotes	2-2
2.3	Servicing and Maintenance Guidelines	2-5
	General	2-5
	Safety and Workmanship	2-5
	Cleanliness	2-5
	Components Removal and Installation	2-5
	Component Disassembly and Reassembly	2-5
	Pressure-Fit Parts	2-5
	Bearings	2-5
	Gaskets	2-5
	Bolt Usage and Torque Application	2-5
	Hydraulic Lines and Electrical Wiring	2-5
	Hydraulic System	2-5
	Lubrication and Servicing	2-6
	Batteries	2-6
	Mast Chain Inspection Procedure	2-6
2.4	Lubrication Information	2-7
	Hydraulic System	2-7
	Hydraulic Oil	2-7
	Changing Hydraulic Oil	2-7
	Lubrication Specifications	2-7

SECTION NO.	TITLE	PAGE NO.
2.5	Battery Charger - Assembly and Disassembly	2-8
	General Information	2-8
	Battery Charger Removal	2-8
	Cover Removal	2-8
	Transformer Replacement	2-9
	Printed Circuit Board Replacement	2-9
	DC Circuit Breaker Replacement	2-9
	AC Circuit Breaker and Voltage Selection Switch Replacement	2-10
	Shunt Assembly, Varistor, and SCR Rectifier Replacement (See Illustration)	2-10
2.6	Fuse Replacement	2-11
2.7	Bucher Brand Pump - Brush Replacement	2-12
	Motor Assembly - Remove/Install - Reference Marks	2-12
	Motor/Brush Cover - Remove/Install	2-12
	Brush Carrier Assembly - Remove/Install	2-13
	Brush Assembly - Remove/Install	2-13
	Tank And Pump Removal - (All Pumps)	2-15
	Tank Installation	2-15
	Filter Screen Installation	2-15
	Pump Installation	2-15
	Pressure Adjust Valve Installation	2-16
	Pressure Check Valve Installation	2-16
2.8	Hydraulic Lift Cylinder - Removal, Inspection and rebuild	2-17
	Cylinder Removal	2-17
	Cylinder Disassembly	2-17
	Lift Cylinder Component Inspection	2-17
	Cylinder Assembly	2-20
	Installation	2-20
2.9	Mast Disassembly Procedure	2-21
	Mast Disassembly Procedure	2-21
	Platform Section Removal (All Masts)	2-22
	Mast Section 6 Removal (7 Section Mast)	2-22
	Mast Section 5 Removal (6 & 7 Section Mast)	2-22
	Mast Section 4 Removal (All Masts)	2-22
	Mast Section 3 Removal (All Masts)	2-22
	Mast Section 2 Removal (All Masts)	2-23
	Mast Section 1 Disassembly (All Masts)	2-23
2.10	Mast Assembly	2-23
	Mast Section 1 - Assembly (All Masts)	2-23
	Mast Section 2 - Assembly (All Masts)	2-23
	Mast Section 3 - Assembly (All Masts)	2-27
	Mast Section 4 - Assembly (All Masts)	2-28
	Mast Section 5 - Assembly (All Masts)	2-29
	Mast Section 6 - Assembly (25 ft. Masts)	2-29
	Platform Mounting Section - Assy. (All Masts)	2-30
2.11	Mast To Base Frame Installation	2-32
2.12	Mast Chains/cables And Sequencing Cables Adjustment	2-33
	Mast Chain/Cable Adjustment	2-33
	Sequencing Cable Adjustment	2-34
2.13	Sequence Cable replacement kit	2-34
	Remove Old Cable	2-34
	Replacement Cable Installation	2-34
	Clamp Installation (Drum/Socket Type)	2-34
2.14	Load Sensing System (LSS)	2-37
	Setting Spring Pre-Load	2-38
	Setting Positive Stops	2-38
	Adjusting Switch	2-38

SECTION NO.	TITLE	PAGE NO.

SECTION 3 - TROUBLESHOOTING

3.1 General . . . 3-1
3.2 Troubleshooting Information . . . 3-1
3.3 Hydraulic Circuit Checks . . . 3-1
3.4 Electrical System - Multimeter Basics . . . 3-1
Grounding . . . 3-1
Backprobing . . . 3-1
Min/Max . . . 3-1
Polarity . . . 3-2
Scale . . . 3-2
Continuity Measurement Over Long Distances . . . 3-2
Requirements: . . . 3-2
Procedure . . . 3-2
3.5 Electrical Switch Testing . . . 3-5
Basic Check . . . 3-5
Limit Switches . . . 3-5
Automatic Switches . . . 3-5
Switch Wiring - Low Side, High Side . . . 3-5
3.6 Outrigger Interlock Contacts . . . 3-8
Outrigger Socket and Outrigger Beam - Interlock Contacts . . . 3-8
Outrigger Socket - Contactor Screw Mounting Instructions . . . 3-8
Outrigger Beam - Interlock Contactor Plate Mounting Instructions . . . 3-8
Detent Screws . . . 3-10
3.7 Hydraulic Schematic . . . 3-12
3.8 Electric Schematic . . . 3-13

FIGURE NO.	TITLE	PAGE NO.
1-1.	Battery Fluid Level	1-4
1-2.	Hydraulic Pressure Setting	1-4
2-1.	Lift Cylinder Internal Component Assembly Cross-Section	2-18
2-2.	Lift Cylinder Assembly	2-19
2-3.	Mast Section - Assembly/Disassembly Reference	2-21
2-4.	25AM Mast Assembly Components (6 - Section)	2-24
2-5.	30AM & 38AM Mast Assembly Components (7 - Section)	2-25
2-6.	Mast Chain/Cable Routing Diagram	2-26
2-7.	Mast Chain/Cable/Sequence Cable Adjustment Components. (Typical)	2-33
2-8.	Load Sensing System (LSS)	2-37
3-1.	Voltage Measurement (DC)	3-3
3-2.	Resistance Measurement	3-3
3-3.	Continuity Measurement	3-4
3-4.	Current Measurement (DC)	3-4
3-5.	Outrigger Socket Contactor Heads and Outrigger Beam	3-9
3-6.	Hydraulic Schematic (AM Series) (2792491_B)	3-12
3-7.	Electrical Schematic - Sheet 1 of 11	3-13
3-8.	Electrical Schematic - Sheet 2 of 11	3-14
3-9.	Electrical Schematic - Sheet 3 of 11	3-15
3-10.	Electrical Schematic - Sheet 4 of 11	3-16
3-11.	Electrical Schematic - Sheet 5 of 11	3-17
3-12.	Electrical Schematic - Sheet 6 of 11	3-18
3-13.	Electrical Schematic - Sheet 7 of 11	3-19
3-13.	Electrical Schematic - Sheet 8 of 11	3-20
3-13.	Electrical Schematic - Sheet 9 of 11	3-21
3-15.	Electrical Schematic - Sheet 10 of 11	3-22
3-13.	Electrical Schematic - Sheet 11 of 11	3-23

TABLE NO.	TITLE	PAGE NO.
1-1	Hydraulic Oil Operating Range	1-2
1-2	Lubricant Key	1-3
1-3	Model AM - Lubrication Intervals for Various Components	1-3
2-1	Inspection and Maintenance	2-2
2-2	AM Model - Preventive Maintenance & Inspection Schedule	2-3
2-3	Chain Stretch Tolerance	2-6
2-4	AM Series Mast Component Features	2-21
3-1	AC Unit - Troubleshooting	3-6
3-2	DC Unit - Troubleshooting	3-7

TABLE NO.	*TITLE*	*PAGE NO.*

SECTION 1. GENERAL SPECIFICATIONS

1.1 OPERATING SPECIFICATIONS

Machine Specifications

SPECIFICATION	25AM	30AM (EXCEPT CE)	30AM (CE ONLY)	38AM
Gross Machine Weight: (Platform Empty) DC:	905 lb (411kg)	1110 lb (503kg)	1110 lb (503kg)	1395 lb (633kg)
AC:	825 lb (374kg)	1030 lb (467kg)	1030 lb (467kg)	1265 lb (574kg)
Machine Height: (Platform Stowed) * Machine Height in Tilt-Back Mode	77.3 in. (2m)	77.3 in. (2m)	77.3 in. (2m)	*77 in. (2m) 104.3 in. (2.64m)
Maximum Outrigger Pad Load: (per outrigger)	510 lb (231kg)	510 lb (231kg)	510 lb (231kg)	510 lb (231kg)
Outrigger Footprint: (Length x Width)	68 x 62 in. (1.72 x 1.57 m)	79 x 79 in. (2.0 x 2.0 m)	75 x 72 in. (1.90 x 1.83 m)	86 x 84 in. (2.18 x 2.13m)
Machine Base - Overall: (Length x Width)	49 x 29 in. (1.24m x 74cm)	52 x 29 in. (1.32m x 74cm)	52 x 29 in. (1.32m x 74cm)	57.5 x 29 in. (1.46m x 74cm)
Maximum Wind Speed	0 mph (0kph) - Machine rated for indoor use only			
Maximum Horizontal Manual Side Force: (Platform fully extended with Maximum load)	45 Pound Force (200 Newtons)			
Maximum Hydraulic System Pressure	Pressure Relief Set to 2800 PSI (193 bar) at Factory			

1.2 ELECTRICAL SPECIFICATIONS

MODEL	25AM	30AM	38AM
System Voltage: DC Models:	12 Volts DC		
AC Models:	100/120/240 Volts AC		
Battery Charger (DC Models) Input:	120/240 Volts AC - 50/60 Hz - Voltage Selectable		
Output:	12 Volt - 10 Amps DC - w/Auto Charge Sensing Circuit		

1.3 BATTERY SPECIFICATIONS

Battery Type	WET/DRY COMBO	AGM (VRLA)
Voltage	12 Volts DC	
Amp Hour (AH) Rating	105 Amp Hr. @ 20 Hr.	100 Amp Hr. @ 20 Hr.
Reserve Capacity	165 Min.	N/A
Cold Cranking Amps	625 Amps @ 0° F	N/A
Weight	54 lb (24kg)	78 lb (35kg)

1.4 PERFORMANCE DATA

Platform Data

SPECIFICATION	25AM	30AM	38AM
Occupants: (Persons allowed in Platform)			
Platform Capacity: ANSI: (U.S.A, Brazil, Japan, China, Latin America)	350 lb (160 kg)	300 lb (136 kg)	300 lb (136 kg)
CE: (Europe, Australia)	350 lb (160 kg)	300 lb (136 kg)	300 lb (136 kg)
Platform Height - Mast Fully Extended - (Ground to Platform Floor):	25 ft. (7.62 m)	30 ft. (9.14 m)	38 ft. (11.58 m)
Platform Working Height - (Average Size Person):	31 ft. (9.4 m)	36 ft. (11 m)	44 ft. (13.4 m)
Platform Cycle Performance -(in seconds) (w/max. rated load) Pump - Lift Up:	62	72	120
Lift Down:	32 - 42	32 - 42	45 - 55

1.5 MACHINE COMPONENT WEIGHTS

MODEL	25AM	30AM	38AM
Platform Weight: (Standard Platform)	55 lb (25 kg)		
DC Voltage Battery Pack: (Wet Cell)	70 lb (32 kg)		

1.6 SERIAL NUMBER PLATE LOCATIONS

For machine identification, a serial number plate is affixed to the machine. The plate is located on the back of the mast, just above the mast support bracket.

1.7 TORQUE REQUIREMENTS

When maintenance becomes necessary or a fastener has loosened, refer to the applicable Torque Specification chart in this section of the manual to determine proper torque values for various size fasteners.

1.8 LUBRICATION

Hydraulic Oil (HO)

Table 1-1. Hydraulic Oil Operating Range

HYDRAULIC SYSTEM OPERATING TEMPERATURE RANGE	SAE VISCOSITYGRADE
+0°F to +180°F (-18°C to -83°C)	10W
+0°F to +210°F (-18°C to +99°C)	10W-20, 10W-30
+50°F to +210°F (+10°C to +99°C)	20W-20

Hydraulic oils must have anti-wear qualities at least to API Service Classification GL-3, and sufficient chemical stability for mobile hydraulic system service. JLG Industries, recommends standard UTTO hydraulic oil, which has an SAE viscosity of 10W-30 and a viscosity index of 152.

For cold weather applications, i.e. when temperatures remain consistently below +20°F (–7°C) JLG recommends using hydraulic premium fluid.

Aside from JLG recommendations, it is not advisable to mix oils of different brands or types, as they may not contain the same required additives or be of comparable viscosities. If use of hydraulic oil other than standard UTTO is desired, contact JLG Industries for proper recommendations.

Lubrication Specifications

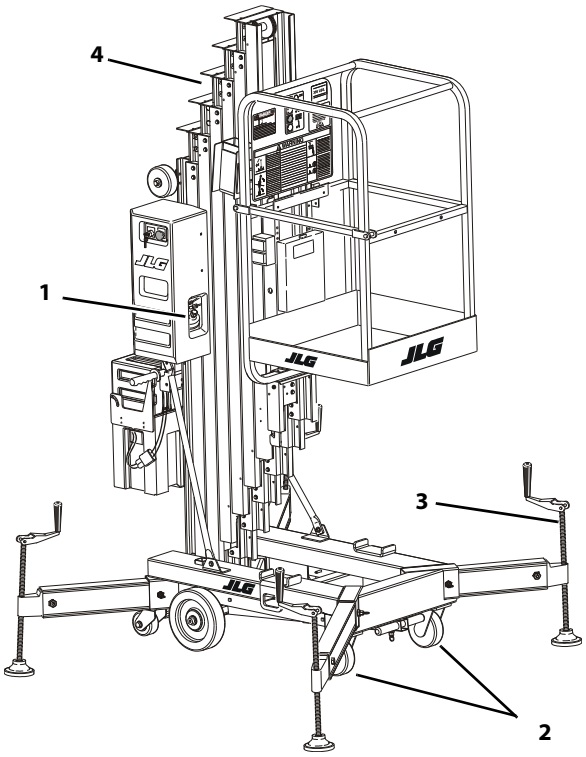

Table 1-2. Lubricant Key

KEY	SPECIFICATIONS
MPG	Multipurpose Grease having a minimum dripping point of 350° F. Excellent water resistance and adhesive qualities, and being of extreme pressure type. (Timken OK 40 pounds minimum.)
EPGL	Extreme Pressure Gear Lube (oil) meeting API service classification GL-5 or MIL-Spec MIL-L-2105.
HO	Hydraulic Oil. ISO-Vg grade 32, 46.
CL	Chain Lube. Use a good quality chain lubricant

NOTE: *Refer to Lubrication Chart, Table 1-3 on page 1-3for specific lubrication locations on machine.*

Table 1-3. Model AM - Lubrication Intervals for Various Components

ITEM	COMPONENT	NO/TYPE LUBE POINTS	LUBE/METHOD	INTERVAL HOURS				COMMENTS
				3 MONTHS 150 Hrs.	6 MONTHS 300 Hrs.	1 YEAR 600 Hrs.	2 YEARS 1200 Hrs.	
1	Hydraulic Oil	Fill To Line on Reservoir 5 Qt. (4.3 L) Reservoir	HO - Check Hyd. Oil Level HO - Change Hyd. Oil				√	Check oil level every day. Change hydraulic oil every 2 years.
2	Swivel Raceways	2 - Front Casters	MPG - Pressure Gun		√			
3	Leveling Jack Screws	4 - Jack Threads	MPG - Brush		√			
4	Mast Chains *	2 - Per Section	CL - Brush or Spray		√			Inspect, lubricate if drying or rusting.

* Applies Only to Mast Sections with Chains.

Key to Lubricants:
MPG - Multipurpose Grease
HO - Hydraulic Oil - ISO-Vg grade 32, 46
CL - Chain Lube. Use a good quality chain lubricant

Notes:
1. Be certain to lubricate like items on each side of the machine.
2. Recommended lubricating intervals are based on normal use. If machine is subjected to severe operating conditions, such as a high number of cycles, location, corrosive/dirty environment, etc., user must adjust lubricating requirements accordingly.
3. Lubricating intervals are calculated on 50 hours of machine operation a week.
4. Prior to checking hydraulic oil level, operate machine through one complete cycle of lift function (full up and down). Failure to do so will result in incorrect oil level reading on the hydraulic reservoir.

1.9 BATTERY MAINTENANCE

NOTE: *This information applies to wet cell batteries only. Do not attempt to open a maintenance-free sealed battery.*

Battery fluid level should be approximately 1/8 in. (3mm) below vent tubes. (See Illustration).

Keep cable connections clean and free of corrosion.

⚠ CAUTION

BATTERY ACID IS HIGHLY CORROSIVE. AVOID CONTACT WITH SKIN AND CLOTHING AT ALL TIMES.

BATTERY ACID RELEASES AN EXPLOSIVE GAS WHILE CHARGING, ALLOW NO OPEN FLAMES, SPARKS OR LIGHTED TOBACCO PRODUCTS IN THE AREA WHILE CHARGING BATTERIES. CHARGE BATTERIES ONLY IN A WELL VENTILATED AREA.

ADD ONLY DISTILLED WATER TO BATTERIES. WHEN ADDING DISTILLED WATER TO THE BATTERIES, A NON-METALLIC CONTAINER AND/OR FUNNEL MUST BE USED.

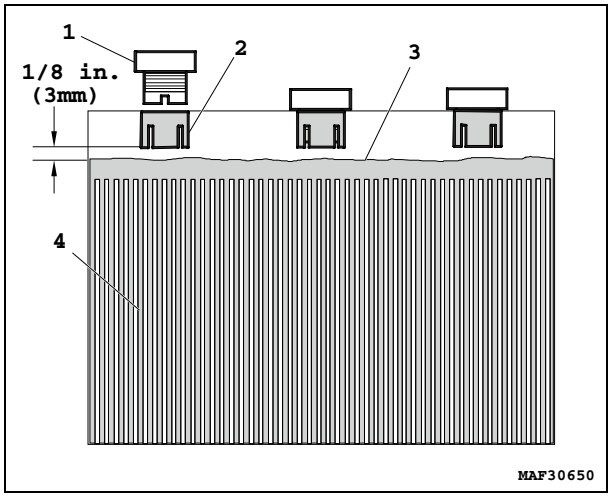

1. Battery Filler Cap
2. Vent Tube
3. Fluid Level
4. Cell Plates

Figure 1-1. Battery Fluid Level

1.10 HYDRAULIC PRESSURE ADJUSTMENT

(See Figure 1-2.)

Adjust system pressure so that platform will raise with rated capacity in platform.

Turning adjustment screw clockwise, increases system pressure, turning screw counterclockwise, decreases system pressure.

Do not adjust system pressure higher than required to raise the load. Make pressure adjustment with oil at normal operating temperature. If pressure is set when oil is cold, platform may not raise rated load after oil has warmed.

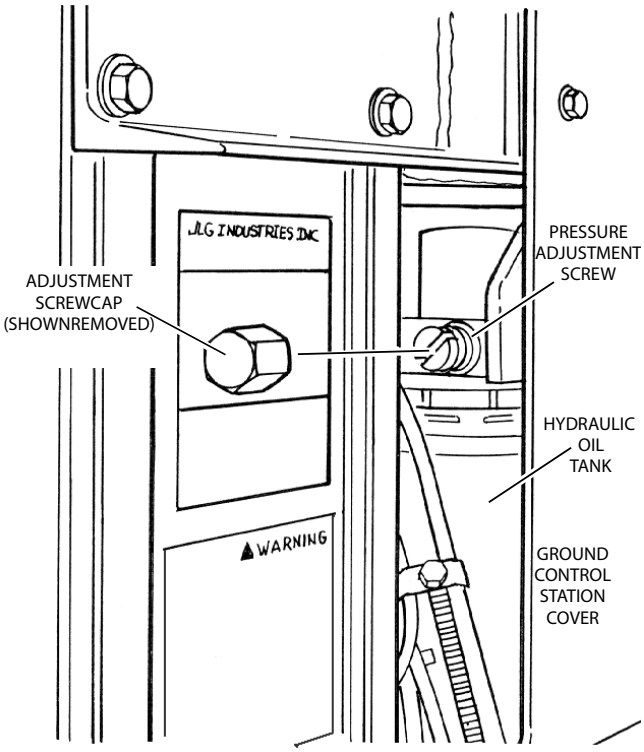

Figure 1-2. Hydraulic Pressure Setting

1.11 CYLINDER SPECIFICATIONS

All dimensions are given in inches (in.), with the metric equivalent, centimeters (cm), given in parentheses.

DESCRIPTION	BORE in./(cm)	STROKE in./(cm)	ROD DIA. in./(cm)
Lift Cylinder - 25AM	1.625 (4.128)	56.375 - 56.625 (143.193 - 143.828)	1.37 - 1.38 (3.48 - 3.50)
Lift Cylinder - 30AM	1.625 (4.128)	56.375 - 56.625 (143.193 - 143.828)	1.37 - 1.38 (3.48 - 3.50)
Lift Cylinder - 38AM	1.625 (4.128)	72.125 - 72.375 (183.198 - 183.833)	1.37 - 1.38 (3.48 - 3.50)

1.12 THREADLOCKING COMPOUND

JLG PN	Loctite®	ND Industries	Description
0100011	242™	Vibra-TITE™ 121	Medium Strength (Blue)
1001095650	243™	Vibra-TITE™ 122	Medium Strength (Blue)
0100019	271™	Vibra-TITE™ 140	High Strength (Red)
0100071	262™	Vibra-TITE™ 131	Medium - High Strength (Red)

NOTE: *Loctite® 243™ can be substituted in place of Loctite® 242™. Vibra-TITE™ 122 can be substituted in place of Vibra-TITE™ 121.*

1.13 TORQUE CHARTS

SAE Fastener Torque Chart

Values for Zinc Yellow Chromate Fasteners (Ref 4150707)												
SAE GRADE 5 BOLTS & GRADE 2 NUTS												
Size	TPI	Bolt Dia	Tensile Stress Area	Clamp Load	Torque (Dry)		Torque Lubricated		Torque (Loctite® 242™ or 271™ or Vibra-TITE™ 111 or 140)		Torque (Loctite® 262™ or Vibra-TITE™ 111)	
		In	Sq In	LB	IN-LB	[N.m]	IN-LB	[N.m]	IN-LB	[N.m]	IN-LB	[N.m]
4	40	0.1120	0.00604	380	8	0.9	6	0.7				
	48	0.1120	0.00661	420	9	1.0	7	0.8				
6	32	0.1380	0.00909	580	16	1.8	12	1.4				
	40	0.1380	0.01015	610	18	2.0	13	1.5				
8	32	0.1640	0.01400	900	30	3.4	22	2.5				
	36	0.1640	0.01474	940	31	3.5	23	2.6				
10	24	0.1900	0.01750	1120	43	4.8	32	3.5				
	32	0.1900	0.02000	1285	49	5.5	36	4				
1/4	20	0.2500	0.0318	2020	96	10.8	75	9	105	12		
	28	0.2500	0.0364	2320	120	13.5	86	10	135	15		
		In	Sq In	LB	FT-LB	[N.m]	FT-LB	[N.m]	FT-LB	[N.m]	FT-LB	[N.m]
5/16	18	0.3125	0.0524	3340	17	23	13	18	19	26	16	22
	24	0.3125	0.0580	3700	19	26	14	19	21	29	17	23
3/8	16	0.3750	0.0775	4940	30	41	23	31	35	48	28	38
	24	0.3750	0.0878	5600	35	47	25	34	40	54	32	43
7/16	14	0.4375	0.1063	6800	50	68	35	47	55	75	45	61
	20	0.4375	0.1187	7550	55	75	40	54	60	82	50	68
1/2	13	0.5000	0.1419	9050	75	102	55	75	85	116	68	92
	20	0.5000	0.1599	10700	90	122	65	88	100	136	80	108
9/16	12	0.5625	0.1820	11600	110	149	80	108	120	163	98	133
	18	0.5625	0.2030	12950	120	163	90	122	135	184	109	148
5/8	11	0.6250	0.2260	14400	150	203	110	149	165	224	135	183
	18	0.6250	0.2560	16300	170	230	130	176	190	258	153	207
3/4	10	0.7500	0.3340	21300	260	353	200	271	285	388	240	325
	16	0.7500	0.3730	23800	300	407	220	298	330	449	268	363
7/8	9	0.8750	0.4620	29400	430	583	320	434	475	646	386	523
	14	0.8750	0.5090	32400	470	637	350	475	520	707	425	576
1	8	1.0000	0.6060	38600	640	868	480	651	675	918	579	785
	12	1.0000	0.6630	42200	700	949	530	719	735	1000	633	858
1 1/8	7	1.1250	0.7630	42300	800	1085	600	813	840	1142	714	968
	12	1.1250	0.8560	47500	880	1193	660	895	925	1258	802	1087
1 1/4	7	1.2500	0.9690	53800	1120	1518	840	1139	1175	1598	1009	1368
	12	1.2500	1.0730	59600	1240	1681	920	1247	1300	1768	1118	1516
1 3/8	6	1.3750	1.1550	64100	1460	1979	1100	1491	1525	2074	1322	1792
	12	1.3750	1.3150	73000	1680	2278	1260	1708	1750	2380	1506	2042
1 1/2	6	1.5000	1.4050	78000	1940	2630	1460	1979	2025	2754	1755	2379
	12	1.5000	1.5800	87700	2200	2983	1640	2224	2300	3128	1974	2676

NOTES: 1. THESE TORQUE VALUES DO NOT APPLY TO CADMIUM PLATED FASTENERS 5000059K

2. ALL TORQUE VALUES ARE STATIC TORQUE MEASURED PER STANDARD AUDIT METHODS TOLERANCE = ±10%

3. * ASSEMBLY USES HARDENED WASHER

SAE Fastener Torque Chart (Continued)

Values for Zinc Yellow Chromate Fasteners (Ref 4150707)										
SAE GRADE 8 (HEX HD) BOLTS & GRADE 8 NUTS*										
Size	TPI	Bolt Dia	Tensile Stress Area	Clamp Load	Torque (Dry or Loctite® 263) K=0.20		Torque (Loctite® 242™ or 271™ or Vibra-TITE™ 111 or 140) K=0.18		Torque (Loctite® 262™ or Vibra-TITE™ 131) K=0.15	
		In	Sq In	LB	IN-LB	[N.m]	IN-LB	[N.m]	IN-LB	[N.m]
4	40	0.1120	0.00604							
	48	0.1120	0.00661							
6	32	0.1380	0.00909							
	40	0.1380	0.01015							
8	32	0.1640	0.01400							
	36	0.1640	0.01474	1320	43	5				
10	24	0.1900	0.01750	1580	60	7				
	32	0.1900	0.02000	1800	68	8				
1/4	20	0.2500	0.0318	2860	143	16	129	15		
	28	0.2500	0.0364	3280	164	19	148	17		
		In	Sq In	LB	FT-LB	[N.m]	FT-LB	[N.m]	FT-LB	[N.m]
5/16	18	0.3125	0.0524	4720	25	35	20	25	20	25
	24	0.3125	0.0580	5220	25	35	25	35	20	25
3/8	16	0.3750	0.0775	7000	45	60	40	55	35	50
	24	0.3750	0.0878	7900	50	70	45	60	35	50
7/16	14	0.4375	0.1063	9550	70	95	65	90	50	70
	20	0.4375	0.1187	10700	80	110	70	95	60	80
1/2	13	0.5000	0.1419	12750	105	145	95	130	80	110
	20	0.5000	0.1599	14400	120	165	110	150	90	120
9/16	12	0.5625	0.1820	16400	155	210	140	190	115	155
	18	0.5625	0.2030	18250	170	230	155	210	130	175
5/8	11	0.6250	0.2260	20350	210	285	190	260	160	220
	18	0.6250	0.2560	23000	240	325	215	290	180	245
3/4	10	0.7500	0.3340	30100	375	510	340	460	280	380
	16	0.7500	0.3730	33600	420	570	380	515	315	430
7/8	9	0.8750	0.4620	41600	605	825	545	740	455	620
	14	0.8750	0.5090	45800	670	910	600	815	500	680
1	8	1.0000	0.6060	51500	860	1170	770	1045	645	875
	12	1.0000	0.6630	59700	995	1355	895	1215	745	1015
1 1/8	7	1.1250	0.7630	68700	1290	1755	1160	1580	965	1310
	12	1.1250	0.8560	77000	1445	1965	1300	1770	1085	1475
1 1/4	7	1.2500	0.9690	87200	1815	2470	1635	2225	1365	1855
	12	1.2500	1.0730	96600	2015	2740	1810	2460	1510	2055
1 3/8	6	1.3750	1.1550	104000	2385	3245	2145	2915	1785	2430
	12	1.3750	1.3150	118100	2705	3680	2435	3310	2030	2760
1 1/2	6	1.5000	1.4050	126500	3165	4305	2845	3870	2370	3225
	12	1.5000	1.5800	142200	3555	4835	3200	4350	2665	3625

NOTES: 1. THESE TORQUE VALUES DO NOT APPLY TO CADMIUM PLATED FASTENERS 5000059K

2. ALL TORQUE VALUES ARE STATIC TORQUE MEASURED PER STANDARD AUDIT METHODS TOLERANCE = ±10%

3. * ASSEMBLY USES HARDENED WASHER

SAE Fastener Torque Chart (Continued)

Values for Magni Coating Fasteners (Ref 4150701)										
SAE GRADE 5 BOLTS & GRADE 2 NUTS										
Size	TPI	Bolt Dia	Tensile Stress Area	Clamp Load	Torque (Dry) K=0.17		Torque (Loctite® 242™ or 271™ or Vibra-TITE™ 111 or 140) K=0.16		Torque (Loctite® 262™ or Vibra-TITE™ 131) K=0.15	
		In	Sq In	LB	IN-LB	[N.m]	IN-LB	[N.m]	IN-LB	[N.m]
4	40	0.1120	0.00604	380	7	0.8				
	48	0.1120	0.00661	420	8	0.9				
6	32	0.1380	0.00909	580	14	1.5				
	40	0.1380	0.01015	610	14	1.6				
8	32	0.1640	0.01400	900	25	2.8				
	36	0.1640	0.01474	940	26	2.9				
10	24	0.1900	0.01750	1120	36	4.1				
	32	0.1900	0.02000	1285	42	4.7				
1/4	20	0.2500	0.0318	2020	86	9.7	80	9		
	28	0.2500	0.0364	2320	99	11.1	95	11		
		In	Sq In	LB	FT-LB	[N.m]	FT-LB	[N.m]	FT-LB	[N.m]
5/16	18	0.3125	0.0524	3340	15	20	14	19	15	20
	24	0.3125	0.0580	3700	15	20	15	21	15	20
3/8	16	0.3750	0.0775	4940	25	35	25	34	25	34
	24	0.3750	0.0878	5600	30	40	28	38	25	34
7/16	14	0.4375	0.1063	6800	40	55	40	54	35	48
	20	0.4375	0.1187	7550	45	60	44	60	40	54
1/2	13	0.5000	0.1419	9050	65	90	60	82	55	75
	20	0.5000	0.1599	10700	75	100	71	97	65	88
9/16	12	0.5625	0.1820	11600	90	120	87	118	80	109
	18	0.5625	0.2030	12950	105	145	97	132	90	122
5/8	11	0.6250	0.2260	14400	130	175	120	163	115	156
	18	0.6250	0.2560	16300	145	195	136	185	125	170
3/4	10	0.7500	0.3340	21300	225	305	213	290	200	272
	16	0.7500	0.3730	23800	255	345	238	324	225	306
7/8	9	0.8750	0.4620	29400	365	495	343	466	320	435
	14	0.8750	0.5090	32400	400	545	378	514	355	483
1	8	1.0000	0.6060	38600	545	740	515	700	480	653
	12	1.0000	0.6630	42200	600	815	563	765	530	721
1 1/8	7	1.1250	0.7630	42300	675	920	635	863	595	809
	12	1.1250	0.8560	47500	755	1025	713	969	670	911
1 1/4	7	1.2500	0.9690	53800	955	1300	897	1219	840	1142
	12	1.2500	1.0730	59600	1055	1435	993	1351	930	1265
1 3/8	6	1.3750	1.1550	64100	1250	1700	1175	1598	1100	1496
	12	1.3750	1.3150	73000	1420	1930	1338	1820	1255	1707
1 1/2	6	1.5000	1.4050	78000	1660	2260	1560	2122	1465	1992
	12	1.5000	1.5800	87700	1865	2535	1754	2385	1645	2237

NOTES: 1. THESE TORQUE VALUES DO NOT APPLY TO CADMIUM PLATED FASTENERS

2. ALL TORQUE VALUES ARE STATIC TORQUE MEASURED PER STANDARD AUDIT METHODS TOLERANCE = ±10%

3. * ASSEMBLY USES HARDENED WASHER

5000059K

SAE Fastener Torque Chart (Continued)

Values for Magni Coating Fasteners (Ref 4150701)										
SAE GRADE 8 (HEX HD) BOLTS & GRADE 8 NUTS*										
Size	TPI	Bolt Dia	Tensile Stress Area	Clamp Load	Torque (Dry or Loctite® 263) K=0.17		Torque (Loctite® 242™ or 271™ or Vibra-TITE™ 111 or 140) K=0.16		Torque (Loctite® 262™ or Vibra-TITE™ 131) K=0.15	
		In	Sq In	LB	IN-LB	[N.m]	IN-LB	[N.m]	IN-LB	[N.m]
4	40	0.1120	0.00604							
	48	0.1120	0.00661							
6	32	0.1380	0.00909							
	40	0.1380	0.01015							
8	32	0.1640	0.01400							
	36	0.1640	0.01474	1320	37	4				
10	24	0.1900	0.01750	1580	51	6				
	32	0.1900	0.02000	1800	58	7				
1/4	20	0.2500	0.0318	2860	122	14	114	13		
	28	0.2500	0.0364	3280	139	16	131	15		
		In	Sq In	LB	FT-LB	[N.m]	FT-LB	[N.m]	FT-LB	[N.m]
5/16	18	0.3125	0.0524	4720	20	25	20	25	20	25
	24	0.3125	0.0580	5220	25	35	20	25	20	25
3/8	16	0.3750	0.0775	7000	35	50	35	50	35	50
	24	0.3750	0.0878	7900	40	55	40	55	35	50
7/16	14	0.4375	0.1063	9550	60	80	55	75	50	70
	20	0.4375	0.1187	10700	65	90	60	80	60	80
1/2	13	0.5000	0.1419	12750	90	120	85	115	80	110
	20	0.5000	0.1599	14400	100	135	95	130	90	120
9/16	12	0.5625	0.1820	16400	130	175	125	170	115	155
	18	0.5625	0.2030	18250	145	195	135	185	130	175
5/8	11	0.6250	0.2260	20350	180	245	170	230	160	220
	18	0.6250	0.2560	23000	205	280	190	260	180	245
3/4	10	0.7500	0.3340	30100	320	435	300	410	280	380
	16	0.7500	0.3730	33600	355	485	335	455	315	430
7/8	9	0.8750	0.4620	41600	515	700	485	660	455	620
	14	0.8750	0.5090	45800	570	775	535	730	500	680
1	8	1.0000	0.6060	51500	730	995	685	930	645	875
	12	1.0000	0.6630	59700	845	1150	795	1080	745	1015
1 1/8	7	1.1250	0.7630	68700	1095	1490	1030	1400	965	1310
	12	1.1250	0.8560	77000	1225	1665	1155	1570	1085	1475
1 1/4	7	1.2500	0.9690	87200	1545	2100	1455	1980	1365	1855
	12	1.2500	1.0730	96600	1710	2325	1610	2190	1510	2055
1 3/8	6	1.3750	1.1550	104000	2025	2755	1905	2590	1785	2430
	12	1.3750	1.3150	118100	2300	3130	2165	2945	2030	2760
1 1/2	6	1.5000	1.4050	126500	2690	3660	2530	3440	2370	3225
	12	1.5000	1.5800	142200	3020	4105	2845	3870	2665	3625

NOTES: 1. THESE TORQUE VALUES DO NOT APPLY TO CADMIUM PLATED FASTENERS 5000059K

2. ALL TORQUE VALUES ARE STATIC TORQUE MEASURED PER STANDARD AUDIT METHODS TOLERANCE = ±10%

3. * ASSEMBLY USES HARDENED WASHER

SAE Fastener Torque Chart (Continued)

Values for Magni Coating Fasteners (Ref 4150701)										
SOCKET HEAD CAPSCREWS										
Size	TPI	Bolt Dia	Tensile Stress Area	Clamp Load See Note 4	Torque (Dry) K=0.17		Torque (Loctite® 242™ or 271™ or Vibra-TITE™ 111 or 140) or Precoat® 85 K=0.16		Torque (Loctite® 262™ or Vibra-TITE™ 131) K=0.15	
		In	Sq In	LB	IN-LB	[N.m]	IN-LB	[N.m]	IN-LB	[N.m]
4	40	0.1120	0.00604							
	48	0.1120	0.00661							
6	32	0.1380	0.00909							
	40	0.1380	0.01015							
8	32	0.1640	0.01400							
	36	0.1640	0.01474							
10	24	0.1900	0.01750							
	32	0.1900	0.02000							
1/4	20	0.2500	0.0318	2860	122	14	114	13		
	28	0.2500	0.0364	3280	139	16	131	15		
		In	Sq In	LB	FT-LB	[N.m]	FT-LB	[N.m]	FT-LB	[N.m]
5/16	18	0.3125	0.0524	4720	20	25	20	25	20	25
	24	0.3125	0.0580	5220	25	35	20	25	20	25
3/8	16	0.3750	0.0775	7000	35	50	35	50	35	50
	24	0.3750	0.0878	7900	40	55	40	55	35	50
7/16	14	0.4375	0.1063	9550	60	80	55	75	50	70
	20	0.4375	0.1187	10700	65	90	60	80	60	80
1/2	13	0.5000	0.1419	12750	90	120	85	115	80	110
	20	0.5000	0.1599	14400	100	135	95	130	90	120
9/16	12	0.5625	0.1820	16400	130	175	125	170	115	155
	18	0.5625	0.2030	18250	145	195	135	185	130	175
5/8	11	0.6250	0.2260	20350	180	245	170	230	160	220
	18	0.6250	0.2560	23000	205	280	190	260	180	245
3/4	10	0.7500	0.3340	30100	320	435	300	415	280	380
	16	0.7500	0.3730	33600	355	485	335	455	315	430
7/8	9	0.8750	0.4620	41600	515	700	485	660	455	620
	14	0.8750	0.5090	45800	570	775	535	730	500	680
1	8	1.0000	0.6060	51500	730	995	685	930	645	875
	12	1.0000	0.6630	59700	845	1150	795	1080	745	1015
1 1/8	7	1.1250	0.7630	68700	1095	1490	1030	1400	965	1310
	12	1.1250	0.8560	77000	1225	1665	1155	1570	1085	1475
1 1/4	7	1.2500	0.9690	87200	1545	2100	1455	1980	1365	1855
	12	1.2500	1.0730	96600	1710	2325	1610	2190	1510	2055
1 3/8	6	1.3750	1.1550	104000	2025	2755	1905	2590	1785	2430
	12	1.3750	1.3150	118100	2300	3130	2165	2945	2030	2760
1 1/2	6	1.5000	1.4050	126500	2690	3660	2530	3440	2370	3225
	12	1.5000	1.5800	142200	3020	4105	2845	3870	2665	3625

NOTES:
1. THESE TORQUE VALUES DO NOT APPLY TO CADMIUM PLATED FASTENERS
2. ALL TORQUE VALUES ARE STATIC TORQUE MEASURED PER STANDARD AUDIT METHODS TOLERANCE = ±10%
3. * ASSEMBLY USES HARDENED WASHER
4. CLAMP LOAD LISTED FOR SHCS IS SAME AS GRADE 8 OR CLASS 10.9 AND DOES NOT REPRESENT FULL STRENGTH CAPABILITY OF SHCS. IF HIGHER LOAD IS REQUIRED, ADDITIONAL TESTING IS REQUIRED.

5000059K

SAE Fastener Torque Chart (Continued)

Values for Zinc Yellow Chromate Fasteners (Ref 4150707)*										
SOCKET HEAD CAPSCREWS										
Size	TPI	Bolt Dia	Tensile Stress Area	Clamp Load See Note 4	Torque (Dry) K=0.17		Torque (Loctite® 242™ or 271™ or Vibra-TITE™ 111 or 140) or Precoat® 85 K=0.16		Torque (Loctite® 262™ or Vibra-TITE™ 131) K=0.15	
		In	Sq In	LB	IN-LB	[N.m]	IN-LB	[N.m]	IN-LB	[N.m]
4	40	0.1120	0.00604							
	48	0.1120	0.00661							
6	32	0.1380	0.00909							
	40	0.1380	0.01015							
8	32	0.1640	0.01400							
	36	0.1640	0.01474							
10	24	0.1900	0.01750							
	32	0.1900	0.02000							
1/4	20	0.2500	0.0318	2860	122	14	114	13		
	28	0.2500	0.0364	3280	139	16	131	15		
		In	Sq In	LB	FT-LB	[N.m]	FT-LB	[N.m]	FT-LB	[N.m]
5/16	18	0.3125	0.0524	4720	20	25	20	25	20	25
	24	0.3125	0.0580	5220	25	35	20	25	20	25
3/8	16	0.3750	0.0775	7000	35	50	35	50	35	50
	24	0.3750	0.0878	7900	40	55	40	55	35	50
7/16	14	0.4375	0.1063	9550	60	80	55	75	50	70
	20	0.4375	0.1187	10700	65	90	60	80	60	80
1/2	13	0.5000	0.1419	12750	90	120	85	115	80	110
	20	0.5000	0.1599	14400	100	135	95	130	90	120
9/16	12	0.5625	0.1820	16400	130	175	125	170	115	155
	18	0.5625	0.2030	18250	145	195	135	185	130	175
5/8	11	0.6250	0.2260	20350	180	245	170	230	160	220
	18	0.6250	0.2560	23000	205	280	190	260	180	245
3/4	10	0.7500	0.3340	30100	320	435	300	415	280	380
	16	0.7500	0.3730	33600	355	485	335	455	315	430
7/8	9	0.8750	0.4620	41600	515	700	485	660	455	620
	14	0.8750	0.5090	45800	570	775	535	730	500	680
1	8	1.0000	0.6060	51500	730	995	685	930	645	875
	12	1.0000	0.6630	59700	845	1150	795	1080	745	1015
11/8	7	1.1250	0.7630	68700	1095	1490	1030	1400	965	1310
	12	1.1250	0.8560	77000	1225	1665	1155	1570	1085	1475
11/4	7	1.2500	0.9690	87200	1545	2100	1455	1980	1365	1855
	12	1.2500	1.0730	96600	1710	2325	1610	2190	1510	2055
13/8	6	1.3750	1.1550	104000	2025	2755	1905	2590	1785	2430
	12	1.3750	1.3150	118100	2300	3130	2165	2945	2030	2760
11/2	6	1.5000	1.4050	126500	2690	3660	2530	3440	2370	3225
	12	1.5000	1.5800	142200	3020	4105	2845	3870	2665	3625

NOTES:
1. THESE TORQUE VALUES DO NOT APPLY TO CADMIUM PLATED FASTENERS
2. ALL TORQUE VALUES ARE STATIC TORQUE MEASURED PER STANDARD AUDIT METHODS TOLERANCE = ±10%
3. * ASSEMBLY USES HARDENED WASHER
4. CLAMP LOAD LISTED FOR SHCS IS SAME AS GRADE 8 OR CLASS 10.9 AND DOES NOT REPRESENT FULL STRENGTH CAPABILITY OF SHCS. IF HIGHER LOAD IS REQUIRED, ADDITIONAL TESTING IS REQUIRED.

5000059K

Metric Fastener Torque Chart

Values for Zinc Yellow Chromate Fasteners (Ref 4150707)*							
CLASS 8.8 METRIC (HEX/SOCKET HEAD) BOLTS CLASS 8 METRIC NUTS							
Size	Pitch	Tensile Stress Area	Clamp Load See Note 4	Torque (Dry or Loctite® 263™)	Torque (Lube)	Torque (Loctite® 262™ or 271™ or Vibra-TITE™ 131)	Torque (Loctite® 242™ or 271™ or Vibra-TITE™ 111 or 141)
		Sq mm	KN	[N.m]		[N.m]	[N.m]
3	0.5	5.03	2.19	1.3	1.0	1.2	1.4
3.5	0.6	6.78	2.95	2.1	1.6	1.9	2.3
4	0.7	8.78	3.82	3.1	2.3	2.8	3.4
5	0.8	14.20	6.18	6.2	4.6	5.6	6.8
6	1	20.10	8.74	11	7.9	9.4	12
7	1	28.90	12.6	18	13	16	19
8	1.25	36.60	15.9	26	19	23	28
10	1.5	58.00	25.2	50	38	45	55
12	1.75	84.30	36.7	88	66	79	97
14	2	115	50.0	140	105	126	154
16	2	157	68.3	219	164	197	241
18	2.5	192	83.5	301	226	271	331
20	2.5	245	106.5	426	320	383	469
22	2.5	303	132.0	581	436	523	639
24	3	353	153.5	737	553	663	811
27	3	459	199.5	1080	810	970	1130
30	3.5	561	244.0	1460	1100	1320	1530
33	3.5	694	302.0	1990	1490	1790	2090
36	4	817	355.5	2560	1920	2300	2690
42	4.5	1120	487.0	4090	3070	3680	4290

NOTES:
1. THESE TORQUE VALUES DO NOT APPLY TO CADMIUM PLATED FASTENERS
2. ALL TORQUE VALUES ARE STATIC TORQUE MEASURED PER STANDARD AUDIT METHODS TOLERANCE = ±10%
3. * ASSEMBLY USES HARDENED WASHER
4. CLAMP LOAD LISTED FOR SHCS IS SAME AS GRADE 8 OR CLASS 10.9 AND DOES NOT REPRESENT FULL STRENGTH CAPABILITY OF SHCS. IF HIGHER LOAD IS REQUIRED, ADDITIONAL TESTING IS REQUIRED.

5000059K

Metric Fastener Torque Chart (Continued)

Values for Zinc Yellow Chromate Fasteners (Ref 4150707)*						
CLASS 10.9 METRIC (HEX HEAD) BOLTS, CLASS 10 METRIC NUTS CLASS 12.9 SOCKET HEAD CAPSCREWS M3 - M5*						
Size	Pitch	Tensile Stress Area	Clamp Load See Note 4	Torque (Dry or Loctite® 263™) K=0.20	Torque (Lube or Loctite® 242™ or 271™ or Vibra-TITE™ 111 or 140) K=0.18	Torque (Loctite® 262™ or Vibra-TITE™ 131) K=0.15
		Sq mm	KN	[N.m]	[N.m]	[N.m]
3	0.5	5.03	3.13			
3.5	0.6	6.78	4.22			
4	0.7	8.78	5.47			
5	0.8	14.20	8.85			
6	1	20.10	12.5			
7	1	28.90	18.0	25	23	19
8	1.25	36.60	22.8	37	33	27
10	1.5	58.00	36.1	70	65	55
12	1.75	84.30	52.5	125	115	95
14	2	115	71.6	200	180	150
16	2	157	97.8	315	280	235
18	2.5	192	119.5	430	385	325
20	2.5	245	152.5	610	550	460
22	2.5	303	189.0	830	750	625
24	3	353	222.0	1065	960	800
27	3	459	286.0	1545	1390	1160
30	3.5	561	349.5	2095	1885	1575
33	3.5	694	432.5	2855	2570	2140
36	4	817	509.0	3665	3300	2750
42	4.5	1120	698.0	5865	5275	4395

NOTES:

1. THESE TORQUE VALUES DO NOT APPLY TO CADMIUM PLATED FASTENERS 5000059K
2. ALL TORQUE VALUES ARE STATIC TORQUE MEASURED PER STANDARD AUDIT METHODS TOLERANCE = ±10%
3. * ASSEMBLY USES HARDENED WASHER
4. CLAMP LOAD LISTED FOR SHCS IS SAME AS GRADE 8 OR CLASS 10.9 AND DOES NOT REPRESENT FULL STRENGTH CAPABILITY OF SHCS. IF HIGHER LOAD IS REQUIRED, ADDITIONAL TESTING IS REQUIRED.

Metric Fastener Torque Chart (Continued)

Values for Magni Coated Fasteners (Ref 4150701)*						
CLASS 8.8 METRIC (HEX/SOCKET HEAD) BOLTS CLASS 8 METRIC NUTS						
Size	Pitch	Tensile Stress Area	Clamp Load See Note 4	Torque (Dry or Loctite® 263™) K=0.17	Torque (Lube or Loctite® 242™ or 271™ or Vibra-TITE™ 111 or 140) K=0.16	Torque (Loctite® 262™ or Vibra-TITE™ 131) K=0.15
		Sq mm	KN	[N.m]	[N.m]	[N.m]
3	0.5	5.03	2.19	1.1	1.1	1.0
3.5	0.6	6.78	2.95	1.8	1.7	1.5
4	0.7	8.78	3.82	2.6	2.4	2.3
5	0.8	14.20	6.18	5.3	4.9	4.6
6	1	20.10	8.74	9	8.4	7.9
7	1	28.90	12.6	15	14	13
8	1.25	36.60	15.9	22	20	19
10	1.5	58.00	25.2	43	40	38
12	1.75	84.30	36.7	75	70	66
14	2	115	50.0	119	110	105
16	2	157	68.3	186	175	165
18	2.5	192	83.5	256	240	225
20	2.5	245	106.5	362	340	320
22	2.5	303	132.0	494	465	435
24	3	353	153.5	627	590	555
27	3	459	199.5	916	860	810
30	3.5	561	244.0	1245	1170	1100
33	3.5	694	302.0	1694	1595	1495
36	4	817	355.5	2176	2050	1920
42	4.5	1120	487.0	3477	3275	3070

NOTES:

1. THESE TORQUE VALUES DO NOT APPLY TO CADMIUM PLATED FASTENERS
2. ALL TORQUE VALUES ARE STATIC TORQUE MEASURED PER STANDARD AUDIT METHODS TOLERANCE = ±10%
3. * ASSEMBLY USES HARDENED WASHER
4. CLAMP LOAD LISTED FOR SHCS IS SAME AS GRADE 8 OR CLASS 10.9 AND DOES NOT REPRESENT FULL STRENGTH CAPABILITY OF SHCS. IF HIGHER LOAD IS REQUIRED, ADDITIONAL TESTING IS REQUIRED.

5000059K

Metric Fastener Torque Chart (Continued)

Values for Magni Coated Fasteners (Ref 4150701)*						
CLASS 10.9 METRIC (HEX HEAD) BOLTS CLASS 10 METRIC NUTS, CLASS 12.9 SOCKET HEAD CAPSCREWS M6 AND ABOVE*						
Size	Pitch	Tensile Stress Area	Clamp Load See Note 4	Torque (Dry or Loctite® 263™) K=0.17	Torque (Lube or Loctite® 242™ or 271™ or Vibra-TITE™ 111 or 140) K=0.18	Torque (Loctite® 262™ or Vibra-TITE™ 131) K=0.15
		Sq mm	KN	[N.m]	[N.m]	[N.m]
3	0.5	5.03	3.13			
3.5	0.6	6.78	4.22			
4	0.7	8.78	5.47			
5	0.8	14.20	8.85			
6	1	20.10	12.5	13	12	11
7	1	28.90	18.0	21	20	19
8	1.25	36.60	22.8	31	29	27
10	1.5	58.00	36.1	61	58	55
12	1.75	84.30	52.5	105	100	95
14	2	115	71.6	170	160	150
16	2	157	97.8	265	250	235
18	2.5	192	119.5	365	345	325
20	2.5	245	152.5	520	490	460
22	2.5	303	189.0	705	665	625
24	3	353	222.0	905	850	800
27	3	459	286.0	1315	1235	1160
30	3.5	561	349.5	1780	1680	1575
33	3.5	694	432.5	2425	2285	2140
36	4	817	509.0	3115	2930	2750
42	4.5	1120	698.0	4985	4690	4395

NOTES:

1. THESE TORQUE VALUES DO NOT APPLY TO CADMIUM PLATED FASTENERS 5000059K
2. ALL TORQUE VALUES ARE STATIC TORQUE MEASURED PER STANDARD AUDIT METHODS TOLERANCE = ±10%
3. * ASSEMBLY USES HARDENED WASHER
4. CLAMP LOAD LISTED FOR SHCS IS SAME AS GRADE 8 OR CLASS 10.9 AND DOES NOT REPRESENT FULL STRENGTH CAPABILITY OF SHCS. IF HIGHER LOAD IS REQUIRED, ADDITIONAL TESTING IS REQUIRED.

SECTION 2. SERVICE PROCEDURES

2.1 MACHINE PREPARATION, INSPECTION, AND MAINTENANCE

General

This section provides the necessary information needed by those personnel that are responsible to place the machine in operation readiness and maintain its safe operating condition. For maximum service life and safe operation, ensure that all the necessary inspections and maintenance have been completed before placing the machine into service. With proper care, maintenance, and inspections performed per JLG's recommendations with any and all discrepancies corrected, this product will be fit for continued use.

Preparation, Inspection, and Maintenance

It is important to establish and conform to a comprehensive inspection and preventive maintenance program. The following table outlines the periodic machine inspections and maintenance recommended by JLG Industries, Inc. Consult your national, regional, or local regulations for further requirements for mobile elevating work platform. The frequency of inspections and maintenance must be increased as environment, severity, and frequency of usage requires.

Pre-Start Inspection

It is the User's or Operator's primary responsibility to perform a Pre-Start Inspection of the machine prior to use daily or at each change of operator. Refer to the Operation and Safety Manual for completion procedures for the Pre-Start Inspection. The Operation and Safety Manual must be read in its entirety and understood prior to performing the Pre-Start Inspection.

Pre-Delivery Inspection and Frequent Inspection

The Pre-Delivery Inspection and Frequent Inspection shall be performed by a qualified JLG equipment mechanic. JLG Industries, Inc. recognizes a qualified JLG equipment mechanic as a person who, by possession of a recognized degree, certificate, extensive knowledge, training, or experience, has successfully demonstrated the ability and proficiency to service, repair, and maintain the subject JLG product model.

The Pre-Delivery Inspection and Frequent Inspection procedures are performed in the same manner, but at different times. The Pre-Delivery Inspection shall be performed prior to each sale, lease, or rental delivery. The Frequent Inspection shall be accomplished for each machine in service for 3 months or 150 hours (whichever comes first); out of service for a period of more than 3 months; or when purchased used. The frequency of this inspection must be increased as environment, severity, and frequency of usage requires.

Refer to the JLG Pre-Delivery and Frequent Inspection Form and the Inspection and Preventative Maintenance Schedule for items requiring inspection during the performance of these inspections. Refer to the appropriate areas of this manual for servicing and maintenance procedures.

Annual Machine Inspection

JLG recommends that the Annual Machine Inspection be performed by a Factory-Trained Service Technician on an annual basis, no later than thirteen (13) months from the date of the prior Annual Machine Inspection. JLG Industries, Inc. recognizes a Factory-Trained Service Technician as a person who has successfully completed the JLG Service Training School for the subject JLG product model. Refer to the machine Service and Maintenance Manual and appropriate JLG inspection form for performance of this inspection.

Refer to the JLG Annual Machine Inspection Form and the Inspection and Preventative Maintenance Schedule for items requiring inspection during the performance of this inspection. Refer to the appropriate areas of this manual for servicing and maintenance procedures.

For the purpose of receiving safety-related bulletins, it is important that JLG Industries, Inc. has updated ownership information for each machine. When performing each Annual Machine Inspection, notify JLG Industries, Inc. of the current machine ownership.

Preventative Maintenance

In conjunction with the specified inspections, maintenance shall be performed by a qualified JLG equipment mechanic. JLG Industries, Inc. recognizes a qualified JLG equipment mechanic as a person who, by possession of a recognized degree, certificate, extensive knowledge, training, or experience, has successfully demonstrated the ability and proficiency to service, repair, and maintain the subject JLG product model.

Refer to the Preventive Maintenance and Inspection Schedule table and the appropriate areas of this manual for servicing and maintenance procedures. The frequency of service and maintenance must be increased as environment, severity and frequency of usage requires.

Table 2-1. Inspection and Maintenance

TYPE	FREQUENCY	PRIMARY RESPONSIBILITY	SERVICE QUALIFICATION	REFERENCE
Pre-Start Inspection	Prior to use each day; or At each Operator change.	User or Operator	User or Operator	Operator and Safety Manual
Pre-Delivery Inspection	Prior to each sale, lease, or rental delivery.	Owner, Dealer, or User	Qualified JLG Mechanic	Service and Maintenance Manual and applicable JLG inspection form.
Frequent Inspection	In service for 3 months or 150 hours, whichever comes first; or Out of service for a period of more than 3 months; or Purchased used.	Owner, Dealer, or User	Qualified JLG Mechanic	Service and Maintenance Manual and applicable JLG inspection form.
Annual Machine Inspection	Annually, no later than 13 months from the date of the prior inspection.	Owner, Dealer, or User	Factory-Trained Service Technician (recommended)	Service and Maintenance Manual and applicable JLG inspection form.
Preventative Maintenance	At intervals as specified in the Service and Maintenance Manual.	Owner, Dealer, or User	Qualified JLG Mechanic	Service and Maintenance Manual

NOTICE

JLG Industries, Inc. recognizes a Factory-Trained Service Technician as a person who has successfully completed the JLG Service Training School for the specific JLG product model.

2.2 PREVENTIVE MAINTENANCE AND INSPECTION SCHEDULE

The preventive maintenance and inspection checks are listed and defined in the following table. This table is divided into two basic parts, the "AREA" to be inspected and the "INTERVAL" at which the inspection is to take place. Under the "AREA" portion of the table, the various systems along with the components that make up that system are listed. The "INTERVAL" portion of the table is divided into two columns representing the various inspection time periods. The numbers listed within the interval column represent the applicable inspection code for which that component is to be checked.

The checks and services listed in this schedule are not intended to replace any local or regional regulations that may pertain to this type of equipment nor should the lists be considered as all inclusive. Variances in interval times may occur due to climate and/or conditions and depending on the location and use of the machine.

NOTICE

JLG INDUSTRIES REQUIRES THAT A COMPLETE ANNUAL INSPECTION BE PERFORMED IN ACCORDANCE WITH THE "ANNUAL MACHINE INSPECTION REPORT" FORM.

NOTE: *This machine requires periodic safety and maintenance inspections by a qualified JLG mechanic. Notify JLG dealer if inspection is overdue.*

Maintenance and Inspection Schedule Codes

1. Check for proper and secure installation, adjustment, or torque.
2. Visual inspection for damage: cracks, corrosion, abrasions, distortion, excessive wear, broken welds, gouges, chafing and threads showing.
3. Proper operation.
4. Check for proper sealing, signs of leakage, and fluid level.
5. Clean and free of debris.
6. Decals installed and legible.
7. Check for proper tolerances, routing, and lubrication.
8. Fully Charged.
9. Verify/Perform.

Footnotes

(1)Prior to each sale, lease, or delivery.

(2)In service for 3 months; Out of service for 3 months or more; Purchased used.

(3)Annually, no later than 13 months from the date of the prior inspection, Includes all daily and quarterly inspections, mandated by regulating body.

(50)Indicates a 50 hour interval required to perform task after initial use of machine. This only occurs once in machine life.

** Refer to Operation Manual for machine specific instructions.

Table 2-2. AM Model - Preventive Maintenance & Inspection Schedule

AREA ON MACHINE	INTERVAL	
	PRE-DELIVERY(1) OR FREQUENT(2) INSPECTION	ANNUAL(3) (YEARLY) INSPECTION
MAST AND PLATFORM ASSEMBLY		
Mast Sections	2,3	2,3
Chains, Cables, and Sequencing Cables	1	1,2
Chains Lubricating	1,7	1,2,7,9
Platform, Platform Gate, and Latches	1,3	1,3
Guard Rails and Parts	1,2	1,2
Covers and Shields	1	1
Slide Pads	1,2	1,2
Floor	1,2	1,2
Lanyard Anchorage Point	1,2,6	1,2,6
BASE ASSEMBLY	1	
Brake Release	3	3
Wheel Lug Nut	1[50]	1[50]
CHASSIS ASSEMBLY	1	
Cover Installation	1,5	1,5
Static Strap	1	1
Wheel and Tire Assemblies	1,2	1,2
Drive Motors	1,4,5	1,4,5
Drive Motor Brushes		
FUNCTIONS/CONTROLS		
Controls Operate Properly Return to Neutral/off when Released	3,9	3,9
Emergency Stop Switches (Ground AND Platform)	3	3
Touch Pad and LEDs Light when Pads are Depressed	3	3
Drive Lift Mode Selector Switch	3	3
Manual Descent or Auxiliary Power	3	3
Enclosure and Protective Boot\guard	3	3
Ground Controls Override Platform Controls	3,7	3,7
Function Control Locks, Guards, or Detents	3	3
Brake Release	3	3
POWER SYSTEM		
Battery Fluid Level Correct	1,2	1,2
Motors Free of Damage	2	2
All Electrical Connections Tight, Free of Frays and Corrosion	1,4	1,4
Batteries	1,2,4,8	1,2,4,8
Battery Charger	3	3
HYDRAULIC/ELECTRIC SYSTEM		
Hydraulic Pumps	1,2,4	1,2,3,4,5
Hydraulic Cylinders	2,4,5	2,4,5
Hydraulic Hoses, Lines, and Fittings	1,4	1,4
Hydraulic Reservoir, Cap, and Breather	3,5	3,5
Hydraulic Filters	1,4,5	1,4,5
Hydraulic Fluid	4	4
Hydraulic Valves	1,2,4	1,2,4

Table 2-2. AM Model - Preventive Maintenance & Inspection Schedule

AREA ON MACHINE	INTERVAL	
	PRE-DELIVERY(1) OR FREQUENT(2) INSPECTION	ANNUAL(3) (YEARLY) INSPECTION
Steer Cylinder Attachment Pins and Pin Retainers	1,2	1,2
Electrical Connections	1,2	1,2
Instruments, Gauges Switches, Lights, Horn	3	3
GENERAL		
No Unauthorized Modifications or Additions	9	9
General Structural Condition and Welds	2	2
Paint and Appearance	5	5
Notify JLG of Machine Ownership	9	9
Annual Machine Inspection Due	9	9
All Relevant Safety Publications Incorporated	9	9
All Decals/Placards Installed, Secure, Legible	9	9
All Fasteners, Pins, Shields, and Covers	1,2	1,2
Function Test of All Systems	9	9
Stamp Inspection Date on Frame	-	9

2.3 SERVICING AND MAINTENANCE GUIDELINES

General

The following information is provided to assist you in the use and application of servicing and maintenance procedures contained in this chapter.

⚠ CAUTION

WHEN AN ABNORMAL CONDITION IS NOTED AND PROCEDURES CONTAINED HEREIN DO NOT SPECIFICALLY RELATE TO THE NOTED IRREGULARITY, WORK SHOULD BE STOPPED AND TECHNICALLY QUALIFIED GUIDANCE OBTAINED BEFORE WORK IS RESUMED.

Safety and Workmanship

Your safety, and that of others, is the first consideration when engaging in the maintenance of equipment. Always be conscious of component weight. Never attempt to move heavy parts without the aid of a mechanical device. Do not allow heavy objects to rest in an unstable position. When raising a portion of the equipment, ensure that adequate support is provided.

⚠ WARNING

NEVER WORK UNDER AN ELEVATED PLATFORM UNTIL PLATFORM HAS BEEN SAFELY RESTRAINED FROM ANY MOVEMENT BY BLOCKING OR OVERHEAD SLING.

Cleanliness

The most important single item in preserving the long service life of a machine is to keep dirt and foreign materials out of the vital components. Precautions have been taken to safeguard against this. Shields, covers, seals, and filters are provided to keep the wheel bearings, mast sections and oil supply clean; however, these items must be maintained on a scheduled basis in order to function properly.

At any time when oil lines are disconnected, clear adjacent areas as well as the openings and fittings themselves. As soon as a line or component is disconnected, cap or cover all openings to prevent entry of foreign matter.

Clean and inspect all parts during servicing or maintenance, and assure that all passages and openings are unobstructed. Cover all parts to keep them clean. Be sure all parts are clean before they are installed. New parts should remain in their containers until they are ready to be used.

Components Removal and Installation

Use adjustable lifting devices, whenever possible, if mechanical assistance is required. All slings *(chains, cables, etc.)* should be parallel to each other and as near perpendicular as possible to top of part being lifted.

Should it be necessary to remove a component on an angle, keep in mind that the capacity of an eyebolt or similar bracket lessens, as the angle between the supporting structure and the component becomes less than 90 degrees.

If a part resists removal, check to see whether all nuts, bolts, cables, brackets, wiring, etc., have been removed and that no adjacent parts are interfering.

Component Disassembly and Reassembly

When disassembling or reassembling a component, complete the procedural steps in sequence. Do not partially disassemble or assemble one part, then start on another. Always recheck your work to assure that nothing has been overlooked. Do not make any adjustments, other than those recommended, without obtaining proper approval.

Pressure-Fit Parts

When assembling pressure-fit parts, use an “anti-seize” or molybdenum disulfide base compound to lubricate the mating surface.

Bearings

When a bearing is removed, cover it to keep out dirt and abrasives. Clean bearings in nonflammable cleaning solvent and allow to drip dry. Compressed air can be used but do not spin the bearing.

Discard bearings if the races and balls (or rollers) are pitted, scored, or burned.

If bearing is found to be serviceable, apply a light coat of oil and wrap it in clean (waxed) paper. Do not unwrap reusable or new bearings until they are ready to install.

Lubricate new or used serviceable bearings before installation. When pressing a bearing into a retainer or bore, apply pressure to the outer race. If the bearing is to be installed on a shaft, apply pressure to the inner race.

Gaskets

Check that holes in gaskets align with openings in the mating parts. If it becomes necessary to hand-fabricate a gasket, use gasket material or stock of equivalent material and thickness. Be sure to cut holes in the right location, as blank gaskets can cause serious system damage.

Bolt Usage and Torque Application

Use bolts of proper length. A bolt which is too long will bottom before the head is tight against its related part. If a bolt is too short, there will not be enough thread area to engage and hold the part properly. When replacing bolts, use only those having the same specifications of the original, or one which is equivalent.

Unless specific torque requirements are given within the text, standard torque values should be used on heat-treated bolts, studs, and steel nuts, in accordance with recommended shop practices.

Hydraulic Lines and Electrical Wiring

Clearly mark or tag hydraulic lines and electrical wiring, as well as their receptacles, when disconnecting or removing them from the unit. This will assure that they are correctly reinstalled.

Hydraulic System

Keep the system clean. If evidence of metal or rubber particles is found in the hydraulic system, drain and flush the entire system.

Disassemble and reassemble parts on clean work surface. Clean all metal parts with non-flammable cleaning solvent. Lubricate components, as required, to aid assembly.

Lubrication and Servicing

Components and assemblies requiring lubrication and servicing are shown on the Lubrication Chart in Section 1. Service applicable components with the amount, type, and grade of lubricant recommended in this manual, at the specified intervals. When recommended lubricants are not available, consult your local supplier for an equivalent that meets or exceeds the specifications listed.

Batteries

Clean batteries, using a non-metallic brush and a solution of baking soda and water. Rinse with clean water. After cleaning, thoroughly dry batteries and coat terminals with an anti-corrosion compound.

Mast Chain Inspection Procedure

Inspect mast chains for the following conditions:

Wear: Always inspect that segment of chain that operates over a sheave. As the chain flexes over the extend/retract sheaves, joints and plate edges very gradually wear. Chain "stretch" can be measured using a manufacturers wear scale or steel tape. When chains have elongated 3% they must be removed and replaced. Refer to Table 2-3 for proper chain specifications and allowable stretch tolerances. Peening and wear of chain plate edges are caused by sliding over a chain worn contact face of a sheave, or unusually heavy loads. All of the above require replacement of the chain and correction of the cause. Chain side wear, noticeable when pin heads and outside plates show a definite wear pattern, is caused by misalignment of the sheave/chain anchors and must be corrected promptly. Do not repair chains; if a section of chain is damaged, replace the entire chain set.

Rust and Corrosion: Rust and corrosion will cause a major reduction in the load carrying capacity of the chain, because these are primary reasons for side plate cracking. The initial lubrication at the factory is applied in a hot dip tank to assure full penetration into the joint. Do not steam clean or degrease chains. At time of chain installation, factory lube must be supplemented by a maintenance program to provide a film of oil on the chains at all times. If chains are corroded, they must be inspected, especially the outside plates, for cracks in-line with the pins. If cracks are found, replace the chain; if no cracks are discovered, lubricate the chains by dipping in heated oil, and reinstall on the machine. Keep chains lubricated.

Table 2-3. Chain Stretch Tolerance

Chain Size	Pin to Pin Measurement	Allowable Stretch
0.50 in. pitch	12 in. or 24 pitches	0.24 in./12 in. span
0.625 in. pitch	15 in. or 24 pitches	0.30 in./15 in. span

Fatigue Cracks: Fatigue is a phenomenon that affects most metals, and is the most common cause of chain plate failures. Fatigue cracks are found through the link holes, perpendicular (90 degrees) from the pin in-line position. Inspect chains carefully after long time use and heavy loading for this type of crack. If any cracks are discovered, replace all chains, as seemingly sound plates are on the verge of cracking. Fatigue and ultimate strength failures on JLG Lifts are incurred as a result of severe abuse as design specs are well within the rated lifting capacity of these chains.

Tight Joints: All joints in the leaf chain should flex freely. On leaf chain, tight joints are usually caused by rust/corrosion, or the inside plates "walking" off the bushing. Limber up rusty/corroded chains *(after inspecting care fully)* with a heavy application of oil *(preferably a hot oil dip)*. Tap inside "walking" plates inward; if "walking" persists, replace the chain. This type of problem is accelerated by poor lubrication maintenance practice, and most tight joint chains have been operated with little or no lubrication. Tight joints on leaf chain are generally caused by:

a. Bent pins or plates.

b. Rusty joints.

c. Peened plate edges.

Oil rusty chains, and replace chains with bent or peened chain components. Keep chains lubricated.

Protruding or Turned Pins: Chains operating with inadequate lube generate tremendous friction between the pin and plates (pin and bushing on leaf chain). In extreme cases, this frictional torque can actually turn the pins in the outside press-fit plates. Inspect for turned pins, which can be easily spotted as the "V" flats on the pin heads are no longer in line. Replace all chains showing evidence of turned or protruding pins. Keep chains lubricated.

Chain Anchors and Sheaves: An inspection of the chain must include a close examination of chain anchors and sheaves. Check chain anchors for wear breakage and misalignment. Anchors with worn or broken fingers should be replaced. They should also be adjusted to eliminate twisting the chain for an even load distribution.

Inspect the sheaves, sheave bearings, sheave grooves and pins for extreme wear, replace as necessary. A worn sheave can mean several problems, as follows:

a. Chains too tight.

b. Sheave bearings/pin bad.

c. Bent/misaligned chains.

2.4 LUBRICATION INFORMATION

Hydraulic System

The primary enemy of a hydraulic system is contamination. Contaminants enter the system by various means, e.g., using inadequate hydraulic oil, allowing moisture, grease, filings, sealing components, sand, etc., to enter when performing maintenance, or by permitting the pump to cavitate due to insufficient system warm-up or leaks in the pump supply.

The design and manufacturing tolerances of the component working parts are very close, therefore, even the smallest amount of dirt or foreign matter entering a system can cause wear or damage to the components and generally results in faulty operation. Every precaution must be taken to keep hydraulic oil clean, including reserve oil in storage.

Cloudy oils indicate a high moisture content which permits organic growth, resulting in oxidation or corrosion. If this condition occurs, the system must be drained, flushed, and refilled with clean oil.

It is not advisable to mix oils of different brands or types, as they may not contain the same required additives or be of comparable viscosities. Good grade mineral oils, with viscosities suited to the ambient temperatures in which the machine is operating, are recommended for use.

NOTE: *Metal particles may appear in the oil of new machines due to the wear-in of meshing components.*

Hydraulic Oil

For best performance, JLG recommends the use of ISO-Vg grade 32, 46 oil with a viscosity range between 15-250 SUS at 100 degrees F (32-54 cST at 40 degrees C).

Changing Hydraulic Oil

Use of any of the recommended hydraulic oils eliminates the need for changing the oil on a regular basis. If it is necessary to change the oil, use only those oils meeting or exceeding the specifications appearing in this manual. If unable to obtain the same type of oil supplied with the machine, consult local supplier for assistance in selecting the proper equivalent. Avoid mixing petroleum and synthetic base oils. JLG Industries recommends changing the hydraulic oil annually.

Use every precaution to keep the hydraulic oil clean. If the oil must be poured from the original container into another, be sure to clean all possible contaminants from the service container.

While the unit is shut down, a good preventive maintenance measure is to make a thorough inspection of all hydraulic components, lines, fittings, etc., as well as a functional check of each system, before placing the machine back in service.

Lubrication Specifications

Specified lubricants, as recommended by the component manufacturers, are always the best choice, however, multi-purpose greases usually have the qualities which meet a variety of single purpose grease requirements. Should any question arise regarding the use of greases in maintenance stock, consult your local supplier for evaluation. Refer to Table 1-2. for an explanation of the lubricant key designations appearing in the Lubrication Chart.

2.5 BATTERY CHARGER - ASSEMBLY AND DISASSEMBLY

General Information

NOTICE

DO NOT ATTEMPT TO DISASSEMBLE THE BATTERY CHARGER IF MACHINE IS STILL UNDER WARRANTY. OPENING THE BATTERY CHARGER WHILE THE MACHINE IS UNDER WARRANTY WILL VOID THE CHARGER WARRANTY. IF UNDER WARRANTY REQUEST A REPLACEMENT CHARGER FROM THE FACTORY.

ALSO BEFORE REPLACING ANY COMPONENT, USE THE CHARGER MANUFACTURERS (SCR) BATTERY CHARGER MANUAL INCLUDED WITH THE MACHINE FOR CHECKING THE INTERNAL AC AND DC CIRCUITS TO DETERMINE WHICH COMPONENT HAS FAILED. COMPLETE WIRING DIAGRAMS PERTAINING TO YOUR MODEL CHARGER ARE ALSO INCLUDED IN THE MANUFACTURERS (SCR) BATTERY CHARGER MANUAL

The AM Series dual AC input battery charger allows for replacement of the following internal components. Consult your Illustrated Parts Manual for part numbers of these components which are available from the JLG Parts Department:

- Transformer
- Printed Circuit Board
- Shunt Assembly
- Interlock Relay
- SCR Rectifier
- AC Circuit Breaker
- DC Circuit Breaker

Replacement and troubleshooting of these components requires removal of the battery charger from it's mounting on the charger/battery box assembly.

Battery Charger Removal

1. If plugged in, unplug the AC voltage cord from AC receptacle and remove the charger/battery box unit from the machine.
2. Disconnect the + (RED) and – (BLACK) charging wires from the charger to the battery terminals in the lower battery compartment.
3. Remove the four (4) mounting bolts and washers located on the back of the upper battery box section, securing the charger into the upper section.
4. Remove the charger through the front opening while pulling the charging wires (RED/BLACK) through the hole on the bottom of the upper battery box section.

Cover Removal

5. Remove the ten (10) screws on the sides and top of the charger cover and remove cover.

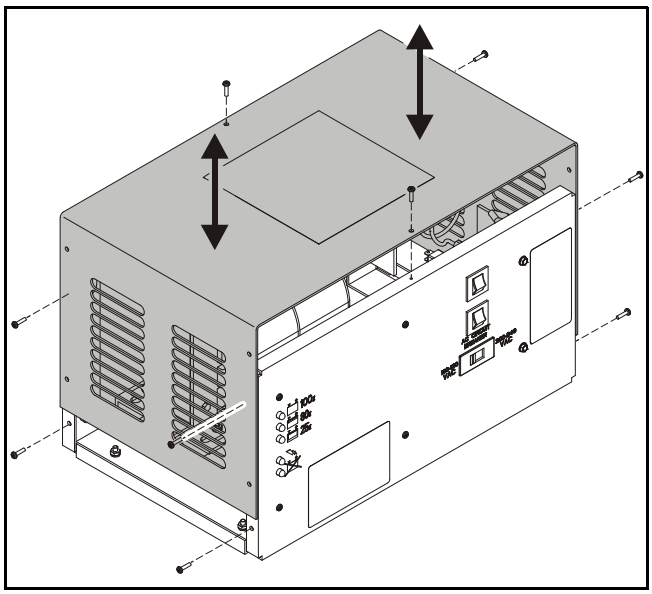

Transformer Replacement

1. Disconnect the wiring connecting the transformer to other components within the charger assembly.
2. Remove the four nuts from the cap screws securing the transformer brackets to the base of the charger chassis.
3. Remove transformer.

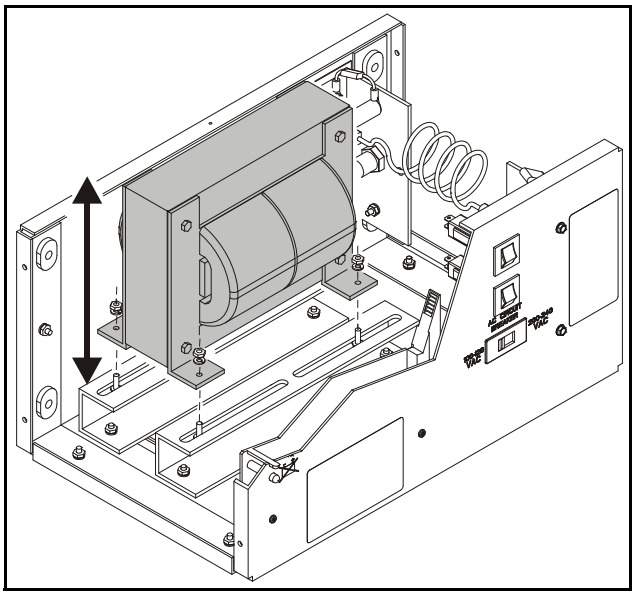

Printed Circuit Board Replacement

1. Disconnect the wide wiring connector from the end of the circuit board.
2. Remove the four (4) screw attaching the card to the front face of the charger chassis.
3. Remove the circuit board.

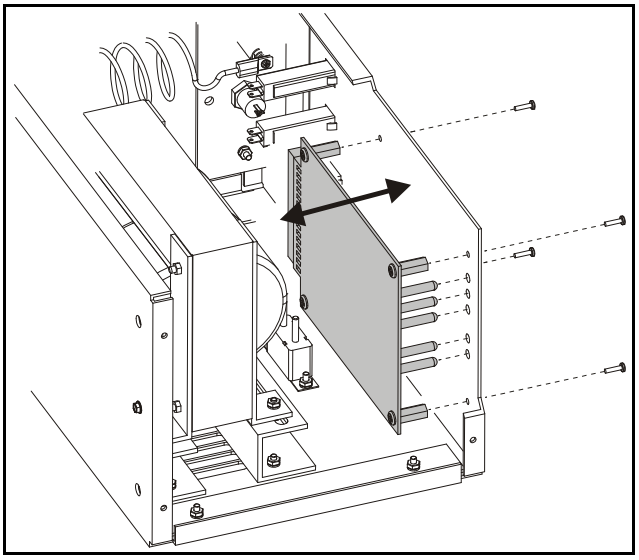

DC Circuit Breaker Replacement

1. Remove the wiring from the breaker terminals.
2. Remove the bolt, nut and washer from each side of the breaker, remove the breaker from the housing.

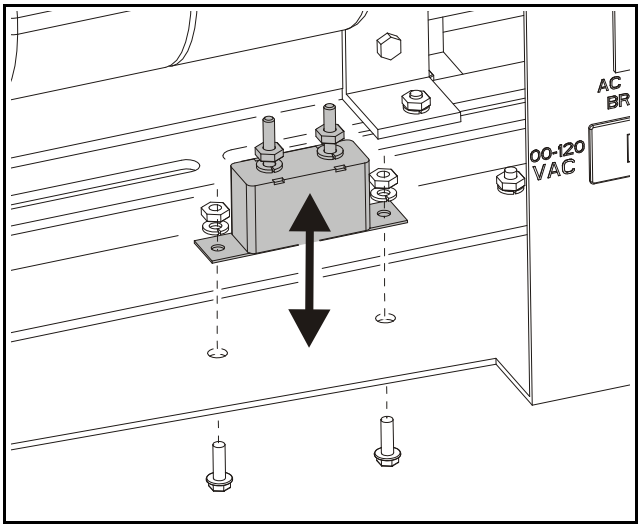

AC Circuit Breaker and Voltage Selection Switch Replacement

1. Remove the wiring from the AC breaker or Voltage Selection Switch terminals.
2. To remove the breaker or switch from the front face of the charger, on the inside of the charger front face, push in on the tabs located on the sides of the breaker/switch assembly and remove the assembly out the front of the charger.

Shunt Assembly, Varistor, and SCR Rectifier Replacement *(See Illustration)*

Shunt Assembly (Item #1)

1. Carefully remove the screw from the end of the shunt assembly. The white insulator may need to be restrained to keep it from turning while removing the shunt assembly fasteners. Also make note of the position of each washer, nut and wire connector when removing for later assembly.

SCR Rectifier Replacement (Item #2)

1. Remove the wiring from the SCR Rectifier.
2. Remove the nut securing the rectifier to the insulated aluminum chassis bracket.
3. Remove the SCR Rectifier.

Varistor Replacement (Item #3)

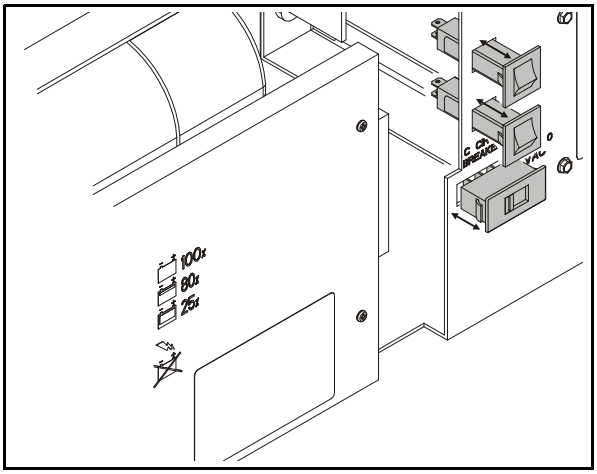

1. Remove the fasteners securing the varistor to the aluminum angle bracket *(see illustration below)*. One through the rear panel of the base with a short white spacer and one at the long white insulator attaching the shunt assembly to the bracket.
2. Remove the varistor from it's mount.

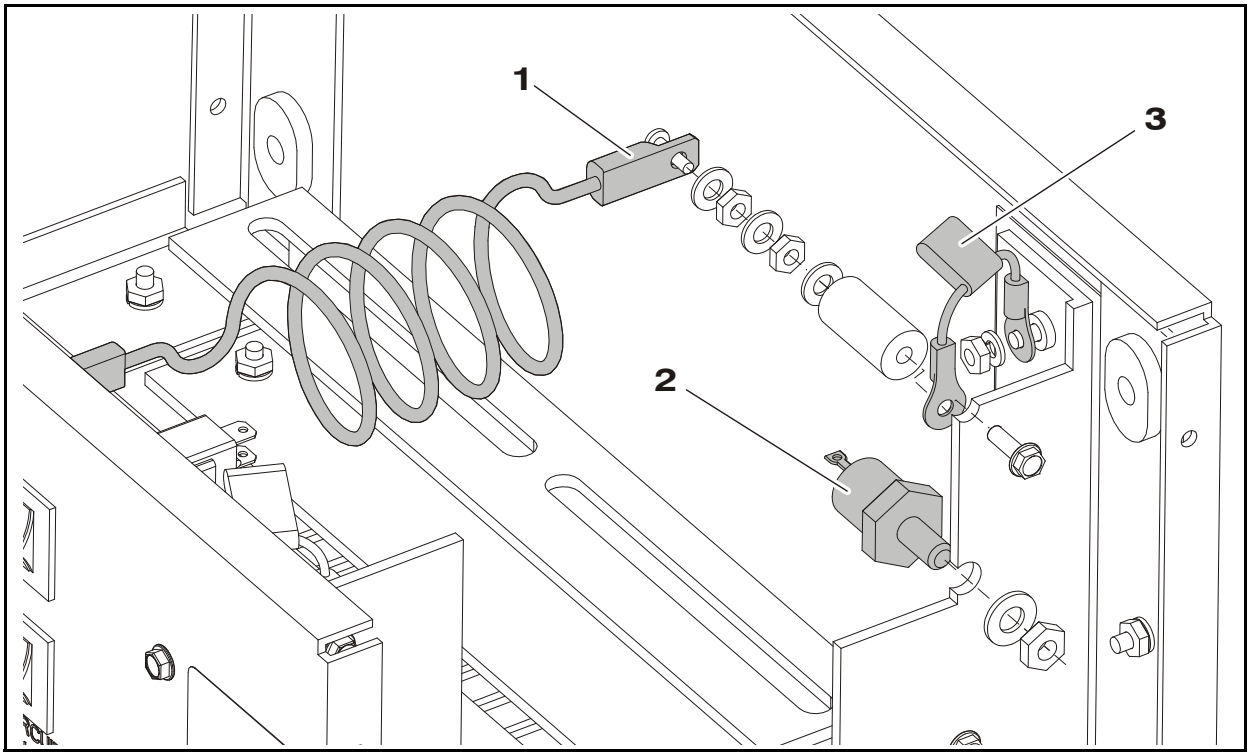

2.6 FUSE REPLACEMENT

1. Remove the tie strap which is holding boot to positive end of battery over battery cable.
2. Remove nut from cap screw attaching battery cable to fuse.
3. Replace the fuse.
4. Follow reverse procedure for securing the fuse.

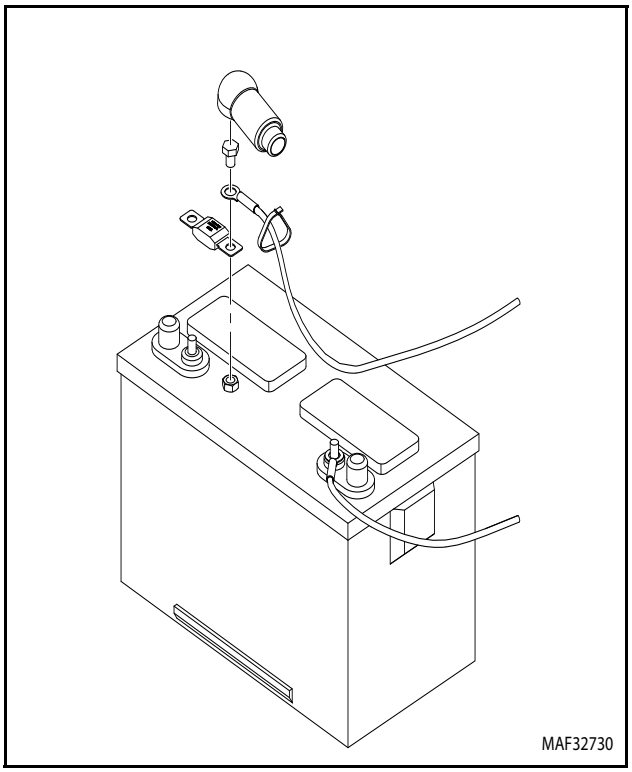

2.7 BUCHER BRAND PUMP - BRUSH REPLACEMENT

Motor Assembly - Remove/Install - Reference Marks

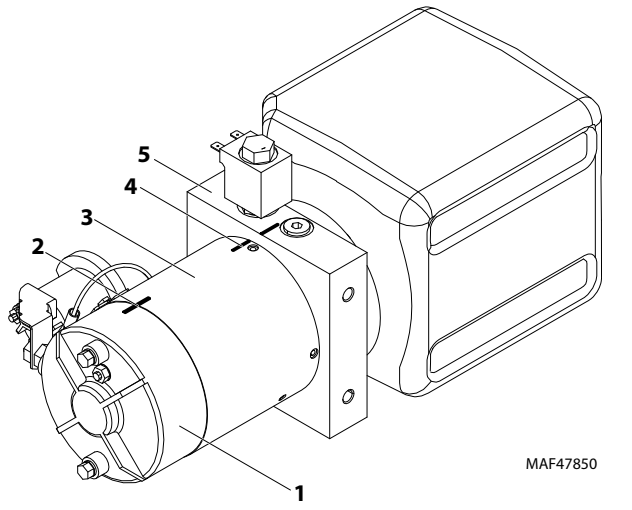

Pump Motor - Removal/Installation - Reference Marks

- For reference when reassembling, mark motor cover, housing and valve body position before disassembling.

1. Motor Top Cover
2. Cover/Housing Reference Mark
3. Motor Housing
4. Housing/Motor Valve Body Reference Mark
5. Motor Valve Body

Motor/Brush Cover - Remove/Install

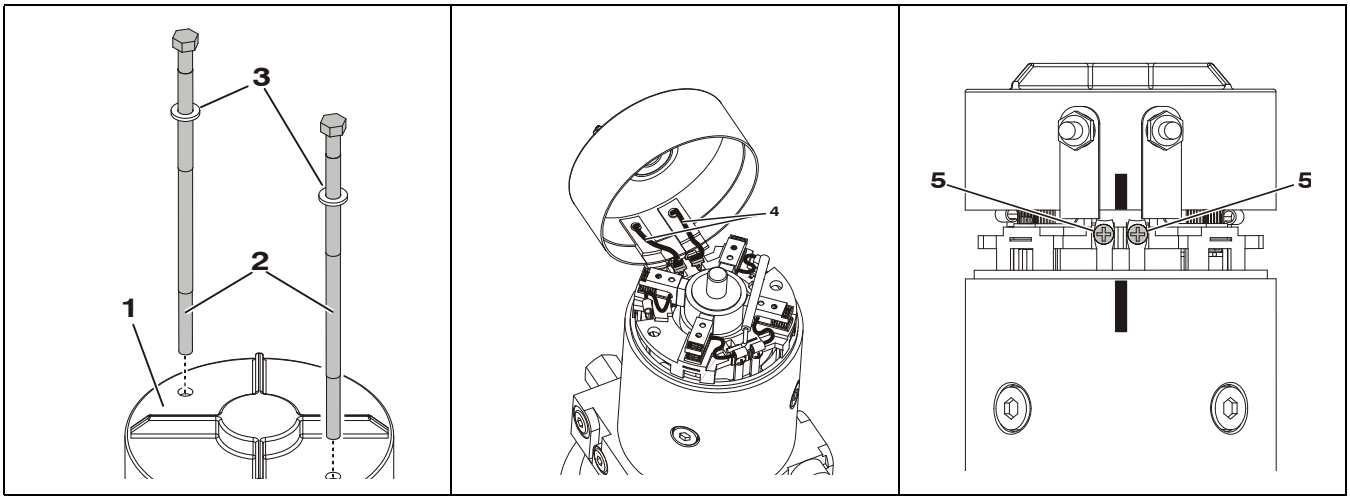

Motor/Brush Cover - Removal/Installation

1. Motor/Brush Cover (a)
2. Cover Screws (b)
3. Washers
4. Power Leads to Lead Clips (Soldered)
5. Power Lead Clip Attach Screws

IMPORTANT

REMOVE THE MOTOR COVER CAREFULLY, THE (SHORT) POWER LEADS INSIDE THE COVER FROM THE (+/–) POSTS ARE SOLDERED TO ATTACH CLIPS WHICH ARE FASTENED TO THE BRUSH CARRIER ASSEMBLY WITH SCREWS (ITEM-5). RAISE THE COVER STRAIGHT UP - REMOVE THE SCREWS - THEN HINGE THE COVER UP (SEE CENTER ILLUSTRATION) AND PRY THE CLIPS OFF OF THE BRUSH CARRIER ASSEMBLY TO COMPLETELY REMOVE THE MOTOR COVER.

NOTE: *(a) Once cover screws are removed, you may need to tap lightly around the edge of the top cover to separate it from the motor housing. Read the important note above before attempting to remove the cover.*
(b) These steel screws are threaded into the aluminum valve body, do not overtighten.

Brush Carrier Assembly - Remove/Install

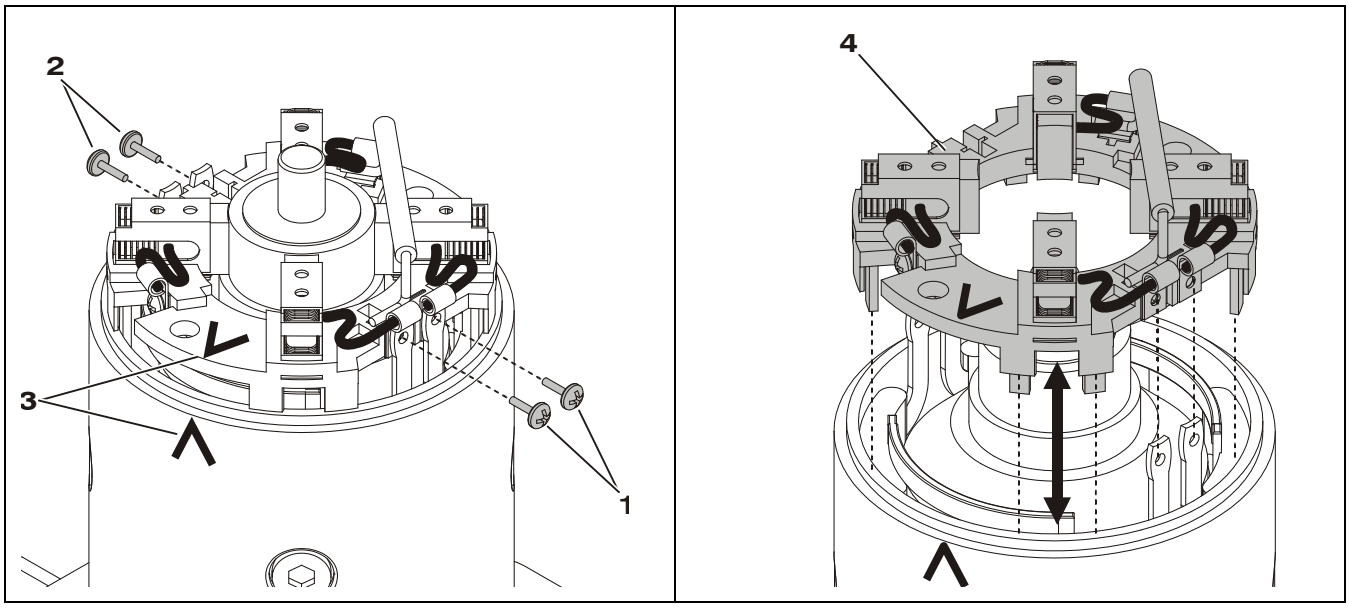

Brush Carrier Assembly - Remove/Install

1. Stator/Brush Carrier Screws (Pump Rear)
2. Stator/Brush Carrier Screws (Pump Front) (a)
3. Mark Brush Carrier Position on Motor Housing
4. Brush Carrier Assembly

NOTE: *(a) Removed previously with motor cover disassembly (shown for reference only).*

Brush Assembly - Remove/Install

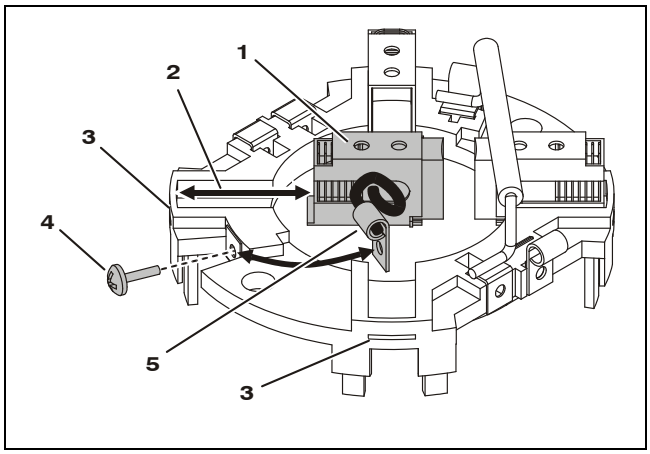

Brush Assembly - Remove/Install

1. Brush Assembly (a)
2. Brush Carrier Socket
3. Brush Tab Slot
4. Brush Terminal Screw
5. Brush Attach Terminal

NOTE: *(a) Slide brush assembly into socket until tab is in slot at rear of socket.*

Tank And Pump Removal - (All Pumps)

Tank Installation

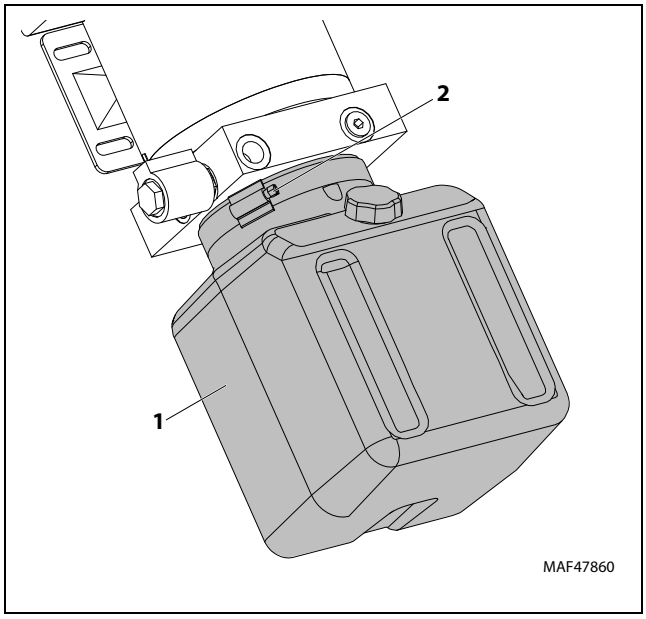

Tank Installation

1. Tank Assembly **2.** Tank Fitting Screw

Filter Screen Installation

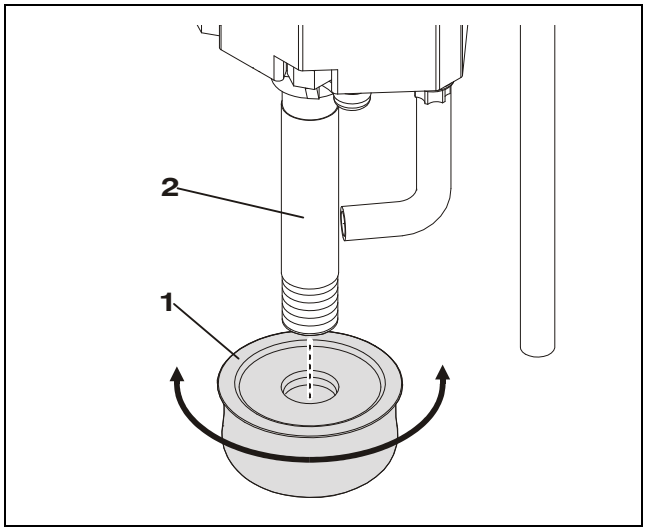

Filter Screen Installation

1. Filter Screen **2.** Pump Pick-Up Tube

Pump Installation

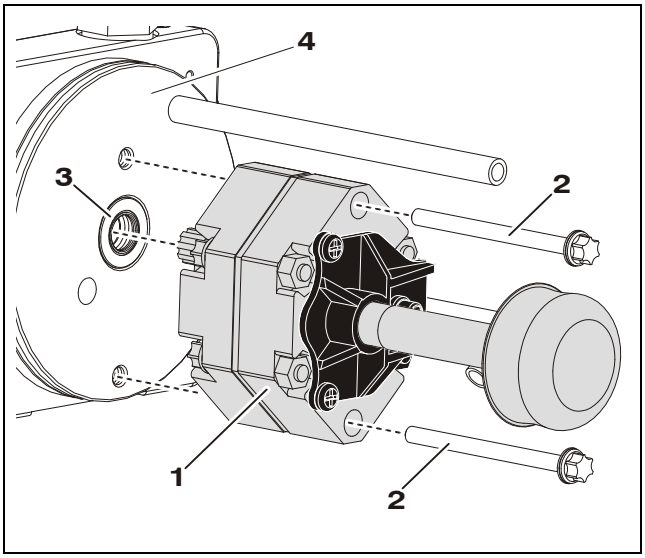

Pump Installation

1. Pump Assembly **3.** Pump Shaft Seal
2. Pump Assembly Screws **4.** Pump End Head

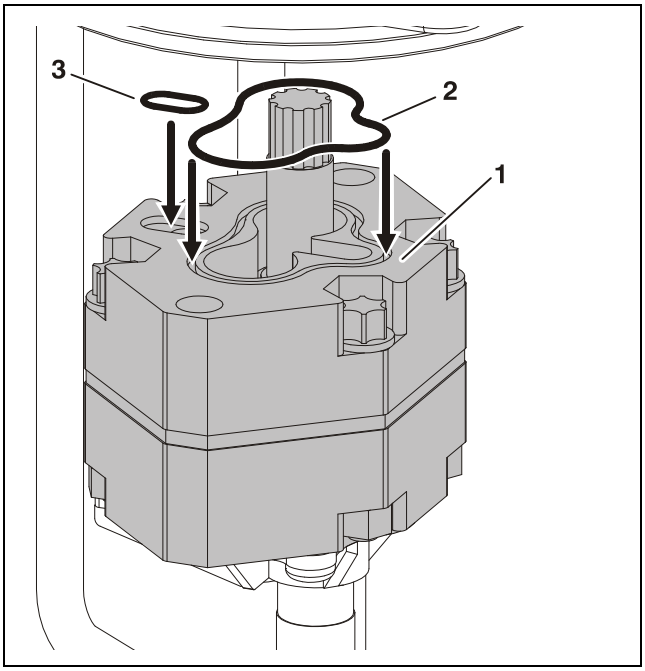

Pump O-Ring Installation

1. Pump Assembly **2.** O-Ring Seal **3.** O-Ring Seal

Pressure Adjust Valve Installation

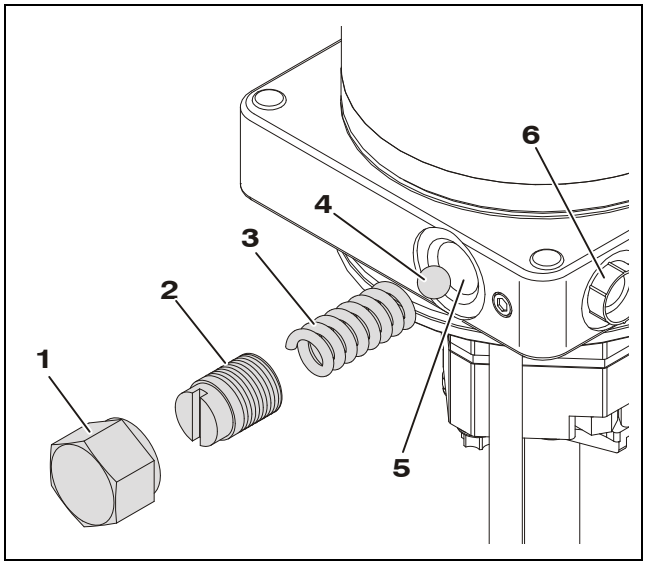

Pressure Adjust Valve Installation

1. Adjust Valve Cap
2. Adjustment Screw
3. Valve Spring
4. Valve Ball
5. Adjust Valve Port
6. Extend (Pressure) Port (Shown Plugged)

Note: Adjust pressure per specification shown in Section-1 of this Service Manual.

Pressure Check Valve Installation

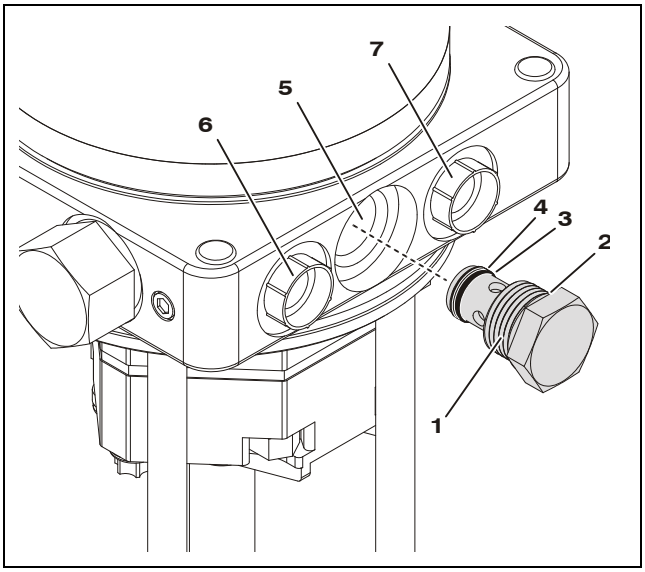

Pressure Check Valve Installation

1. Check Valve Assembly
2. O-Ring Seal
3. O-Ring Seal
4. Backing Ring
5. Check Valve Port
6. Extend (Pressure) Port
7. Return Port

Note: Extend (Pressure) and Return Ports Shown Plugged

2.8 HYDRAULIC LIFT CYLINDER - REMOVAL, INSPECTION AND REBUILD

⚠ WARNING

HYDRAULIC CYLINDERS ARE DESIGNED TO HOLD HYDRAULIC FLUID UNDER HIGH PRESSURE. BE SURE ALL APPROPRIATE MEASURES ARE TAKEN TO RELIEVE RESIDUAL PRESSURE IN THE CYLINDER BEFORE DISCONNECTING LINES.

Cylinder Removal

1. Disconnect power source. *(Remove the DC power pack/ charger assembly from back of mast, if equipped)*.
2. Remove ground control (pump) cover.
3. Disconnect the hydraulic lines at the pump.
4. Using suitable lifting equipment, lay machine down horizontal onto the back of mast to allow access to the bottom of the machine. *(Preferably on an elevated work surface capable of supporting the full weight of the machine)*.
5. Slide *(extend)* the mast out the top about 2 ft. to 3 ft. to allow access to the cylinder attach setscrew on the attach block at the top of mast section-2.
6. Remove the cylinder attach setscrew from the attach block on top of mast section-2. *(Lowest set of sheaves)*.
7. Remove the protective mast cylinder/hydraulic line cover plate from the base frame under the mast.

NOTE: *(Use a container to catch the hydraulic oil from cylinder and hydraulic lines in next step, discard oil).*

8. Remove the hydraulic lines from the mast cylinder.
9. Remove the snap-ring from either end of the cylinder mount pin running through the cylinder valve block. While supporting the cylinder remove the mounting pin.

NOTE: *In the following step the mast cylinder mount will be shimmed tight in the mast.*

10. Remove the cylinder mast mount from the mast.

NOTE: *In the following step the mast cylinder may be tight in the cylinder attach block at the top of the mast.*

11. Pull the mast cylinder out of the mast.

Cylinder Disassembly

1. Before disassembling the cylinder, clean away all dirt and foreign substances from openings, particularly the head area.

NOTE: *Always protect the chrome surface of the cylinder rod during assembly and disassembly. Any damage to this surface will require replacement of the rod.*

2. Extend the rod until the piston bottoms out against the cylinder head.
3. Compress the head retraining ring enough to allow the cylinder head to be removed.
4. Carefully slide the head/rod/piston assembly out of the cylinder tube. A gentle tap on the head assembly may be required to remove the head from the cylinder tube.
5. Place the head/rod/piston assembly on a surface that will not damage the chrome.
6. Remove the piston locknut and separate the piston from the rod.
7. Slide the head off the rod from the piston end.

NOTE: *When removing the old seals use only blunt tools, be sure there are no sharp edges that may damage the seal grooves during removal. Scratching the groove may cause by-pass.*

8. Remove and discard all old seals.

Lift Cylinder Component Inspection

Cylinder Rod

There should be no scratches or pits deep enough to catch the fingernail. Pits that go to the base metal are unacceptable. Scratches that catch the fingernail but are not to the base metal, less than 0.5 inch long and primarily in the circumferential direction are acceptable provided they cannot cut the rod seal. Chrome should be present over the entire surface of the rod and the lack thereof is unacceptable. In the event that an unacceptable condition occurs, the rod should be repaired or replaced.

Cylinder Head

Visually inspect the inside bore for scratches or polishing. Deep scratches are unacceptable. Polishing indicates uneven loading and when this occurs, the bore should be checked for out-of-roundness. If out-of-roundness exceed 0.007 in., this is unacceptable. Check the condition of the dynamic seals (wiper, rod seals) looking particularly for metallic particles embedded in the seal surface. It is normal to cut the static seal on the retaining ring groove upon disassembly. Remove the rod seal, static o-ring and backup and rod wiper. Damage to the seal grooves, particularly on the sealing surfaces, is unacceptable. In the event that an unacceptable condition occurs, the head should be replaced.

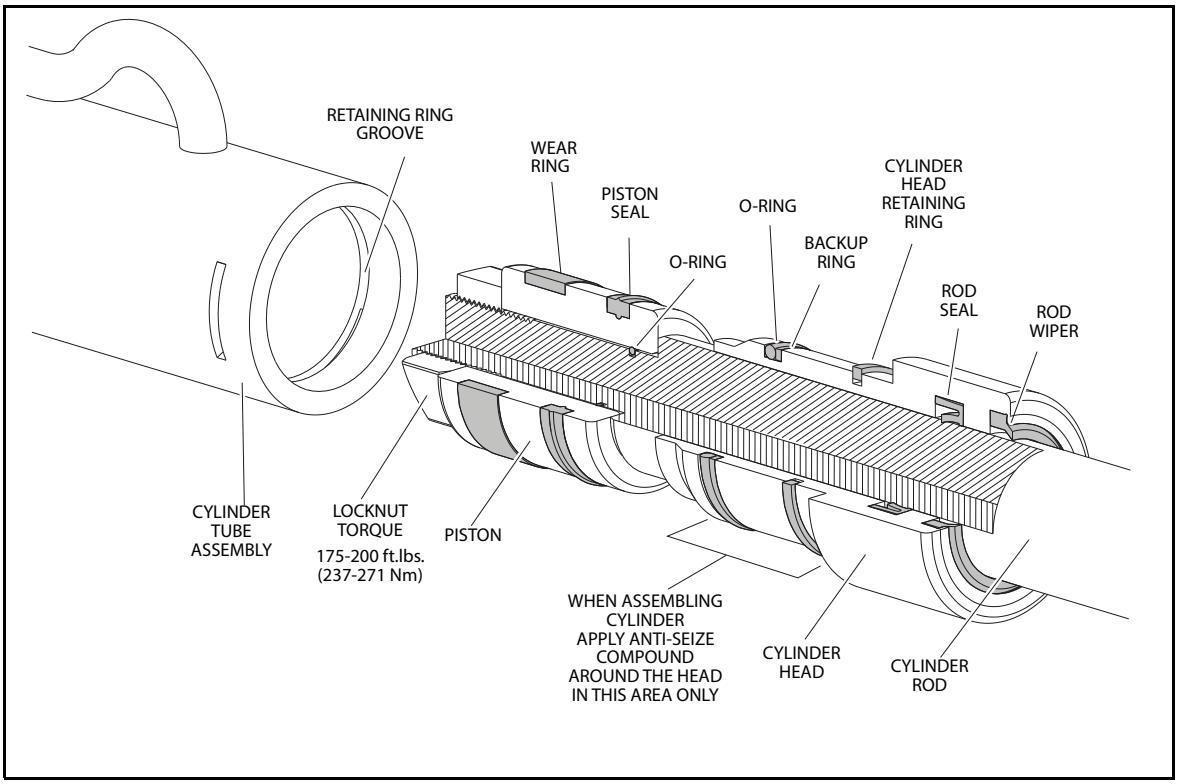

Figure 2-1. Lift Cylinder Internal Component Assembly Cross-Section

Piston

Visually inspect the outside surface for scratches or polishing. Deep scratches are unacceptable. Polishing indicates uneven loading and when this occurs, the diameter should be checked for out-of-roundness. If out-of-roundness exceeds 0.007 in., this is unacceptable. Check the condition of the dynamic seals and bearings looking particularly for metallic particles embedded in the bearing and in the piston seal surface. Remove the seals and bearings. Damage to the seal grooves, particularly on the sealing surfaces, is unacceptable. In the event that an unacceptable condition occurs, the piston should be replaced.

Tube Assembly

Visually inspect the inside bore for scratches and pits. There should be no scratches or pits deep enough to catch the fingernail. Scratches that catch the fingernail but are less than 0.5 in. long and primarily in the circumferential direction are acceptable provided they cannot cut the piston seal. The roughness of the bore should be between 10 and 20 ì inches RMS. Significant variation (greater than 8 ì inches difference) are unacceptable. In the event that an unacceptable condition occurs, the tube assembly should be repaired or replaced.

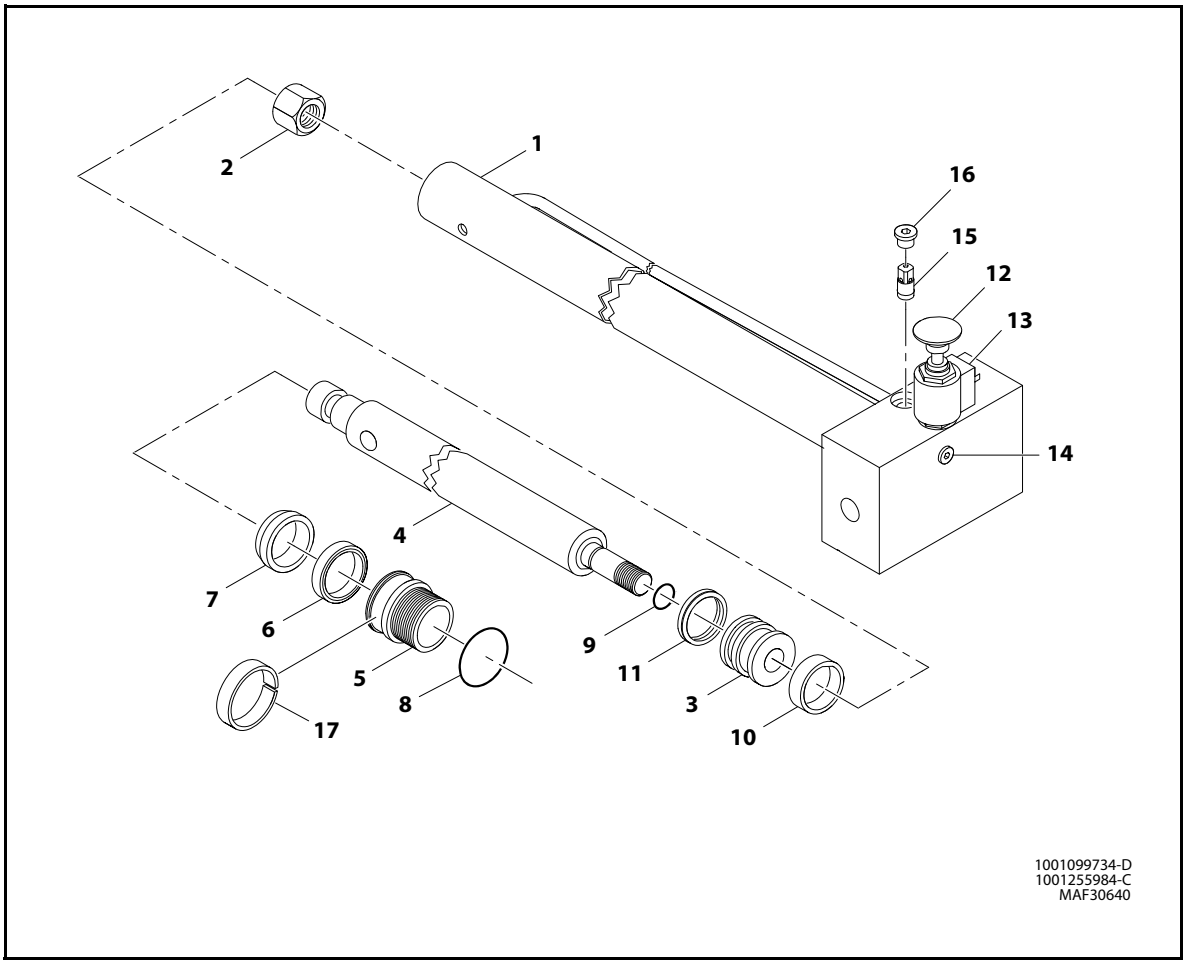

1. Barrel
2. Nut
3. Piston
4. Rod
5. Head
6. Seal, Rod
7. Rod Wiper
8. O-Ring
9. O-Ring
10. Seal
11. Seal, Piston
12. Knob - Red
13. Poppet, Solenoid Valve
14. Plug
15. Flow Control Valve
16. Plug
17. Ring, Wear

Figure 2-2. Lift Cylinder Assembly

Cylinder Assembly

(See Figure 2-1.)

1. Rinse the inside of the tube with hydraulic fluid and allow to drain. A high-pressure rinse followed by a wipe with a lint-free rag is preferable. Clean all internal components of any foreign material.
2. Lubricate the head and all seals with hydraulic fluid prior to installation. Install the seal, wiper, o-ring, back-up ring, and retraining ring to the cylinder head.
3. Lubricate the piston and all components with hydraulic fluid. Install the seal and wear ring to the piston.

NOTE: *Re-check that seals are not twisted or pinched and are properly seated.*

4. Place the rod on a clean table. Install the static o-ring seal into the groove on the piston end of the rod.
5. Install the head followed by the piston onto the rod noting the proper orientation of each component. Torque the piston nut to 175-200 ft. lbs.
6. When the rod assembly is ready to be installed into the tube, liberally apply an anti-seize lubricant to the head outer surface, especially the static seal.
7. Next dip the entire rod assembly into hydraulic fluid and stuff this assembly into the tube. Watch the seals as they pass over the rod port (if visible) to be sure they are not nicked or cut.
8. Install the head until the retaining ring seats in it's groove.

Installation

1. Remove the plastic plugs from the cylinder.
2. Pull rod out of cylinder approximately 3 ft.

NOTE: *The following step is easier done with two people, one to slide the cylinder into the mast, the other to guide the rod into the cylinder block at the top of the mast.*

3. Slide the cylinder into the mast and install the rod into the cylinder attach block.
4. Apply Low Strength Threadlocking Compound (purple) to the setscrew securing the lift cylinder rod to the sheave wheel anchor block at the top of mast section-2.
5. Install the setscrew in the cylinder attach block at the top of the mast, coat the threads of the setscrew with Threadlocking Compound *(RC/#640-blue)* before tightening.
6. Install the cylinder mounting plates at the bottom of the mast section-1. Mount plates two each side, using (2) two long pass through bolts and nuts, apply Medium Strength Threadlocking Compound to the bolt threads before tightening nuts.
7. Install the mounting pin through the side mounting brackets and the cylinder valve body and through the mounting brackets on the other side of the mast. Install the snap rings to each end of the mounting pin.
8. Connect the hydraulic fittings and lines, *(new fittings should be used)*.
9. Slide the mast together *(stowed position)* from the top of the mast.
10. Stand machine upright on it's base wheels.
11. Connect the hydraulic line fittings at the pump.
12. Check oil level in the hydraulic oil reservoir, add oil to fill line, if necessary.
13. Install the ground station *(pump)* cover.
14. Set-up machine for operation and cycle mast *(up and down)* approximately 3 ft. to 4 ft. a few times.
15. Check the hydraulic oil reservoir again, add oil to the fill line.

2.9 MAST DISASSEMBLY PROCEDURE

The AM Series personnel lift mast sections are constructed of extruded aluminum, protected with an anodized surface finish. The mast sections rails are interlocked into each other when assembled and are guided by slide pads mounted at the top and bottom of the rails on both sides of the mast section.

The current AM model line mast assemblies have been designed with either six (6) or seven (7) mast sections as shown following;

Table 2-4. AM Series Mast Component Features

Model	No. of Mast Sections	Extend Device
25AM	6	Chain & Cable
30AM	7	Chain & Cable
38AM	7	Chain & Cable

Assembly procedures for all mast assemblies is basically the same, carefully slide the mast sections together from bottom until mast ends are even, (*when sliding mast sections together be careful not to scratch the anodized surface in the slide pad channels)*. Assemble the hardware to the bottom of mast section first, then slide this section out the top of previous section and assemble hardware to the top of mast, *(See Figure 2-3.)*. Always install slide pad shims with slide pads inserted into the slide pad channels, (ends of mast sections even). Shim slide pads so that all side to side section movement is eliminated, but section can still slide in mast by hand.

Mast Disassembly Procedure

(See Figure 2-3.)

NOTE: *Reference to mast sections -6/-7 made following is dependent on which model machine you are servicing since the 25 ft. machines use six (6) mast sections, the 30 and 38 ft. models use seven (7) mast sections.*

1. After the platform and other hardware have been removed from the mast, and mast has been removed from machine, lay mast assembly down with the shortest mast section -6/-7 on top and facing up.
2. Remove sequencing retract cables from sides of mast assembly and the mini covers from the top of each mast section. Also, remove the latch bar assembly from BOTTOM of mast section -6/-7.

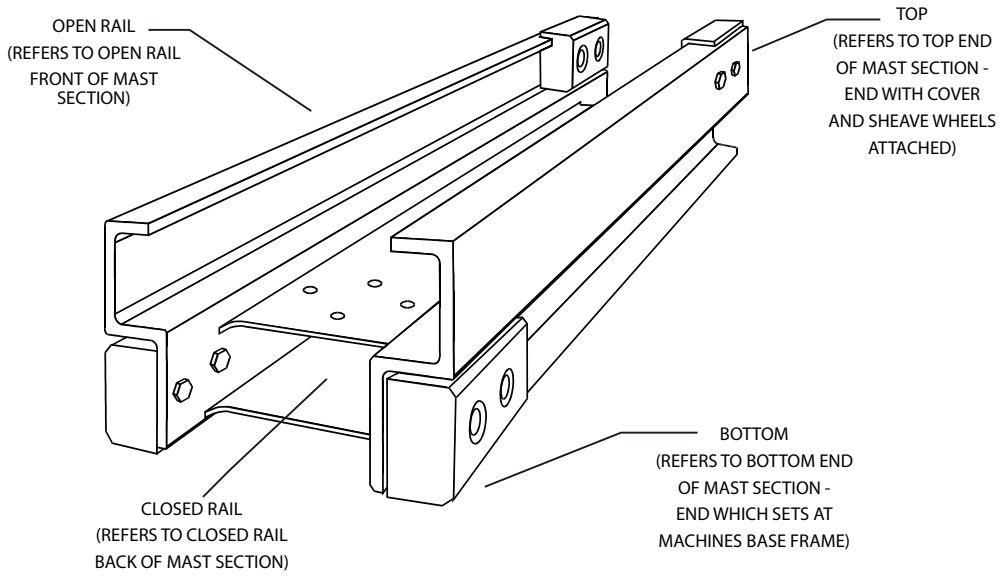

Figure 2-3. Mast Section - Assembly/Disassembly Reference

Platform Section Removal *(All Masts)*

3. Remove cable adjust nuts from threaded ends of cable attached to the cable anchor plate on BOTTOM end of mast section -6/-7 *(short, platform mounting section)*. Push threaded ends of cable through anchor plate
4. At TOP of mast section -6/-7, pull cables out and allow to hang loose.

NOTE: *When sliding mast sections apart, be careful not to scratch or score the anodized finish in the slide pad channels.*

5. Carefully slide short mast section -6/-7 out BOTTOM of mast section -5/-6 rails. Disassemble slide pads, shims and cable anchor plate from mast section -6/-7, if necessary.

Mast Section 6 Removal *(7 Section Mast)*

NOTE: *Steps 6 through 10 apply to removal of mast section-6 used on 30 & 38 ft. models which have seven (7) mast sections. If disassembling a six (6) section 25 ft. mast, go to step 11, if disassembling a five (5) section mast continue to step 15.*

6. Remove cable adjust nuts from threaded ends of cable attached to the cable anchor plate on bottom end of mast section-6. Push threaded ends of cable through anchor plate.
7. At top of mast section-6, pull cables out and allow to hang loose.
8. Slide mast section-6 out TOP of mast section-5 far enough to allow access to the cable sheave wheel assembly.
9. Remove countersunk-flathead screws securing cable sheave wheel assembly attach bars on both side rails at top of mast section-6 and remove sheave wheel assembly.

NOTE: *When sliding mast sections apart, be careful not to scratch or score the anodized finish in the slide pad channels.*

10. Carefully slide mast section-6 out BOTTOM of section-5. Remove slide pads, shims and cable anchor plate, if necessary.

Mast Section 5 Removal *(6 & 7 Section Mast)*

NOTE: *Steps 11 through 15 apply to removal of mast section-5. If servicing a mast section-4, go to step 17.*

11. Remove cable adjust nuts from threaded ends of cable attached to the cable anchor plate on bottom end of mast section-6. Push threaded ends of cable through anchor plate.
12. At top of mast section-5, pull cables out and allow to hang loose.
13. Slide mast section-5 out TOP of mast section-4 far enough to allow access to the cable sheave wheel assembly.
14. Remove countersunk-flathead screws securing cable sheave wheel assembly attach bars on both side rails at top of mast section-6 and remove sheave wheel assembly.

NOTE: *Step 15 applies to removal of the cable assemblies used on mast section-5.*

15. While mast section-5 is still extended from section-4 remove the bolts attaching the two (2) cable assembly anchor eyelets to the TOP of mast section-5. Remove cables.

NOTE: *When sliding mast sections apart, be careful not to scratch or score the anodized finish in the slide pad channels.*

16. Carefully slide mast section-5 out BOTTOM of section-4. Remove slide pads, shims and cable anchor plate, if necessary.

Mast Section 4 Removal *(All Masts)*

17. Remove chain adjust nuts from threaded ends of chain attached to the chain anchor plate on BOTTOM end of mast section-4. Push threaded ends of cable through anchor plate.
18. At TOP of mast section-4, pull chains out and allow to hang loose, *(be certain floor surface is clean and free of any metal chips or debris which may stick to lubricated chains or lay chains in a clean bucket)*.
19. Slide mast section-4 out TOP of mast section-3 far enough to allow access to the cable sheave wheel assembly.
20. Remove countersunk-flathead screws securing cable sheave wheel assembly attach bars on both side rails at TOP of mast section-4 and remove sheave wheel assembly.
21. While mast section-4 is still extended from section-3 remove the bolts attaching the two (2) cable assembly anchor eyelets to the TOP of mast section-4. Remove cables.

NOTE: *When sliding mast sections apart, be careful not to scratch or score the anodized finish in the slide pad channels.*

22. Carefully slide mast section-4 out BOTTOM of section-3. Remove slide pads, shims and chain anchor plate, if necessary.

Mast Section 3 Removal *(All Masts)*

23. Remove chain adjust nuts from threaded ends of chain attached to the chain anchor plate on BOTTOM end of mast section-3. Push threaded ends of cable through anchor plate.
24. At TOP of mast section-3, pull chains out and allow to hang loose, *(be certain floor surface is clean and free of any metal chips or debris which may stick to lubricated chains or lay chains in a clean bucket)*.
25. Slide mast section-3 out TOP of mast section-2 far enough to allow access to the chain sheave wheel assembly.
26. Remove countersunk flathead screws securing chain sheave wheel assembly attach bars on both side rails at TOP of mast section-3 and remove sheave wheel assembly.
27. While mast section-3 is still extended from section-2 remove the bolts attaching the two (2) chain assembly anchor blocks to the TOP of mast section-3. Remove chains.

NOTE: *When sliding mast sections apart, be careful not to scratch or score the anodized finish in the slide pad channels.*

28. Carefully slide mast section-3 out BOTTOM of section-2. Remove slide pads, shims and chain anchor plate, if necessary.

Mast Section 2 Removal *(All Masts)*

29. Slide mast section-2 out TOP of mast section-1 far enough to allow access to the chain anchor block/sheave wheel assembly.
30. Remove countersunk-flathead screws securing chain anchor block/sheave wheel assembly attach bars on both side rails at TOP of mast section-2.
31. Extend the chain anchor block/sheave wheel assembly and hydraulic cylinder rod out the TOP of mast section-2 far enough to allow removal of the sheave wheel attach bars, sheave wheels and sheave pin from the chain assembly anchor block.
32. Remove the setscrew holding the hydraulic cylinder rod into the chain assembly anchor block. Lay chain assembly to side.

NOTE: *When sliding mast sections apart, be careful not to scratch or score the anodized finish in the slide pad channels.*

33. Carefully slide mast section-2 out the TOP of section-1, be careful not to nick or score cylinder rod surface while removing. Remove slide pads and shims, if necessary.

Mast Section 1 Disassembly *(All Masts)*

34. Slide the TOP of the remaining mast section-1 out over edge of work surface and remove the bolts attaching the anchor blocks of the two (2) chain assemblies to mast section-1. Remove chain assemblies from mast and lay aside.
35. Remove the hydraulic lift cylinder from it's mount attached to mast section-1, if necessary.
36. Remove slide pads and shims from mast section-1, is necessary.

Mast disassembly should now be complete.

2.10 MAST ASSEMBLY

(See Figure 2-4. or Figure 2-5.)

Mast Section 1 - Assembly *(All Masts)*

1. Place mast section-1, rail (open) side up *(See Figure 2-3.)* on a clean, flat surface *(preferably a table or work bench capable of supporting the weight of the entire mast assembly)*. Slide mast out over end of work surface far enough to allow access to the chain anchor attach holes at top of mast.
2. Locate the two (2) single *(wide)* chain assemblies. Lay out each chain assembly with anchor block end towards mast, and notched end of block down, *(be certain floor surface is clean and free of any metal chips or debris which may stick to lubricated chains or lay chains in a clean bucket)*.
3. Insert chain adjustment into the top of mast section-1 by using spacer, chain equalizer and Keeper. Secure one end of the chain assembly with chain adjustment by using two (2) pin, cotter pin and washer. Insert threaded ends of chain assembly, through holes in attach bracket attached to bottom of mast section-2. Using two (2) 1/2 in. hex nuts onto stud threads on each chain. Chains will be adjusted later in assembly.

Mast Section 2 - Assembly *(All Masts)*

NOTE: *When sliding mast sections together, be careful not to scratch or score the anodized finish in the slide pad channels.*

4. Locate mast section-2, carefully slide mast section-2 closed rail into section-1 open rail. Slide sections together until ends are even.
5. Insert slide pads into the slide pad channels at bottom end of mast between section-1 and -2, *(one on each side of the mast)*, with beveled surface facing out towards section-1.
6. Thread slide pad attaching bolts, (two (2) 1/4 in. x 3/4 in. long hex head bolts, place a flat washer under head of each bolt), through holes in mast section-2 inside rail, into the slide pad inserts. Thread in enough to hold pad in place.
7. Shim slide pads using the following steps:

NOTE: *Always use an even amount of shim material behind slide pads on both sides of the mast rails. This will keep mast sections centered in rail channels and prevent any distortion of the mast section.*

   a. Start with a 0.036 in. thick shim and a 0.075 in. thick shim per side at each slide pad.
   b. Slide shims into place between slide pad and mast rail. Tighten the slide pad mounting bolts, be sure there are no air gaps between shims, shim and mast or shim and slide pad when tightened.
   c. Check mast section for side play. If play exists add 0.015 in. shims dividing the thickness equally between both sides of mast. Insert shims until the shims cannot be inserted halfway by hand with the mast pulled to the opposite side.

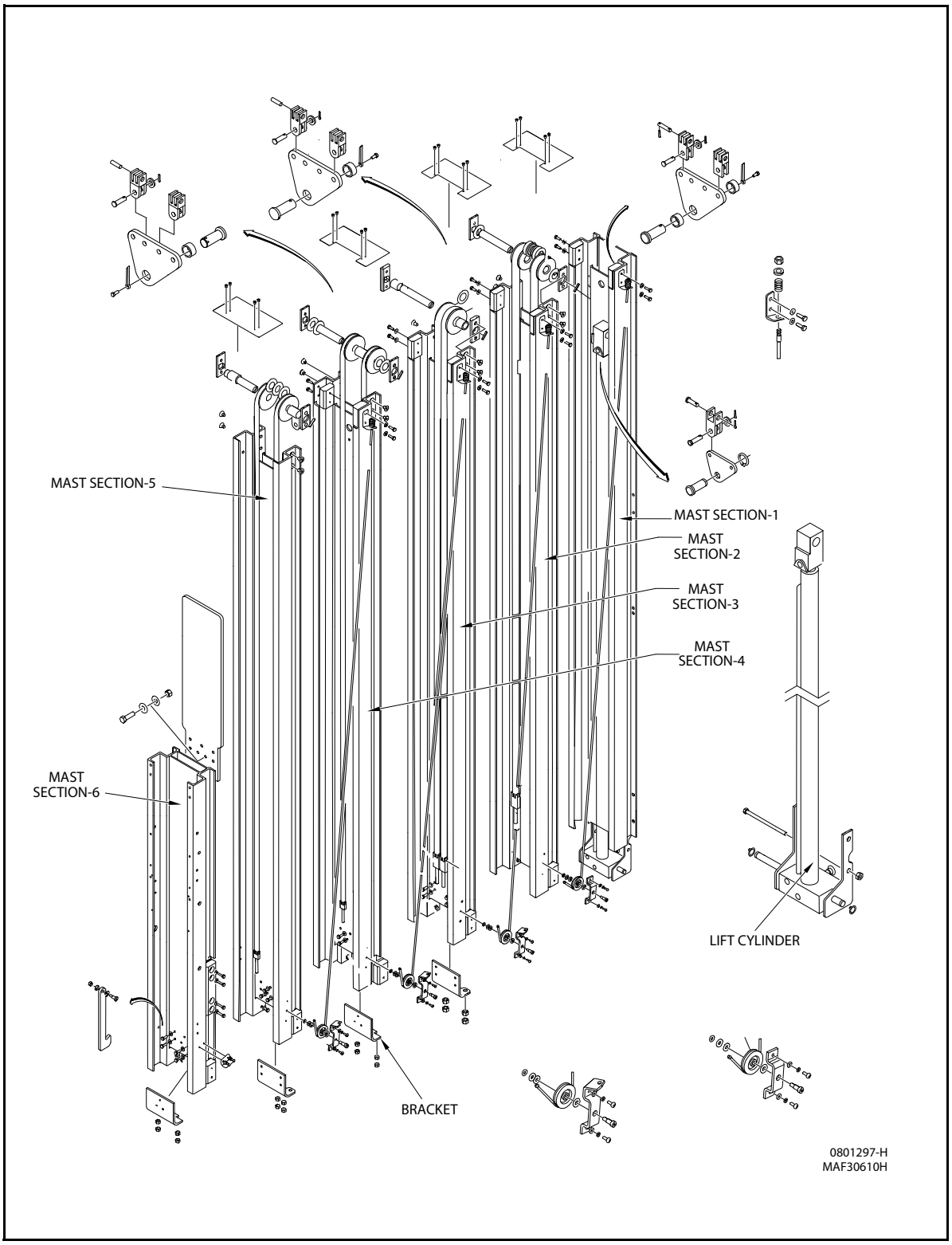

Figure 2-4. 25AM Mast Assembly Components (6 - Section)

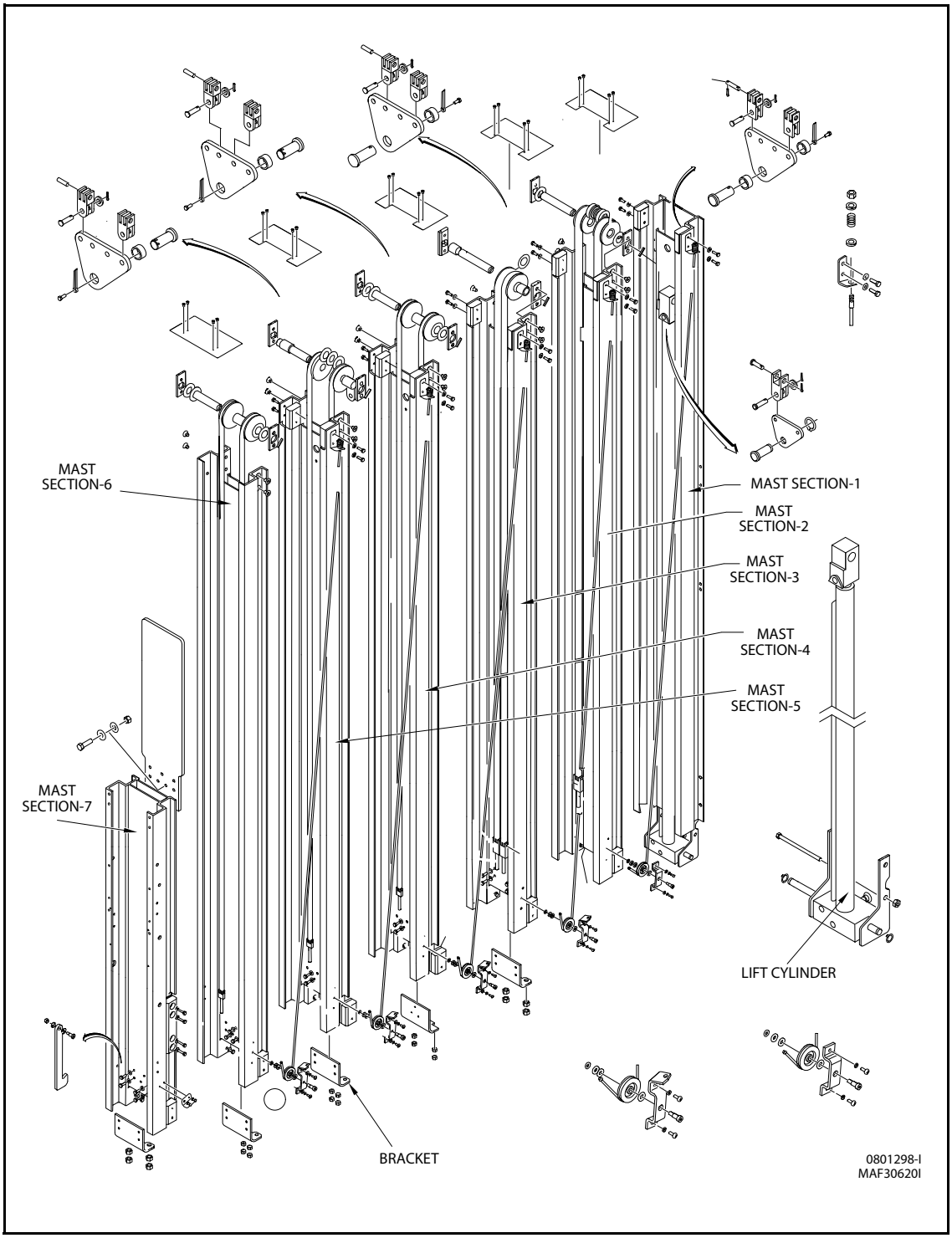

Figure 2-5. 30AM & 38AM Mast Assembly Components (7 - Section)

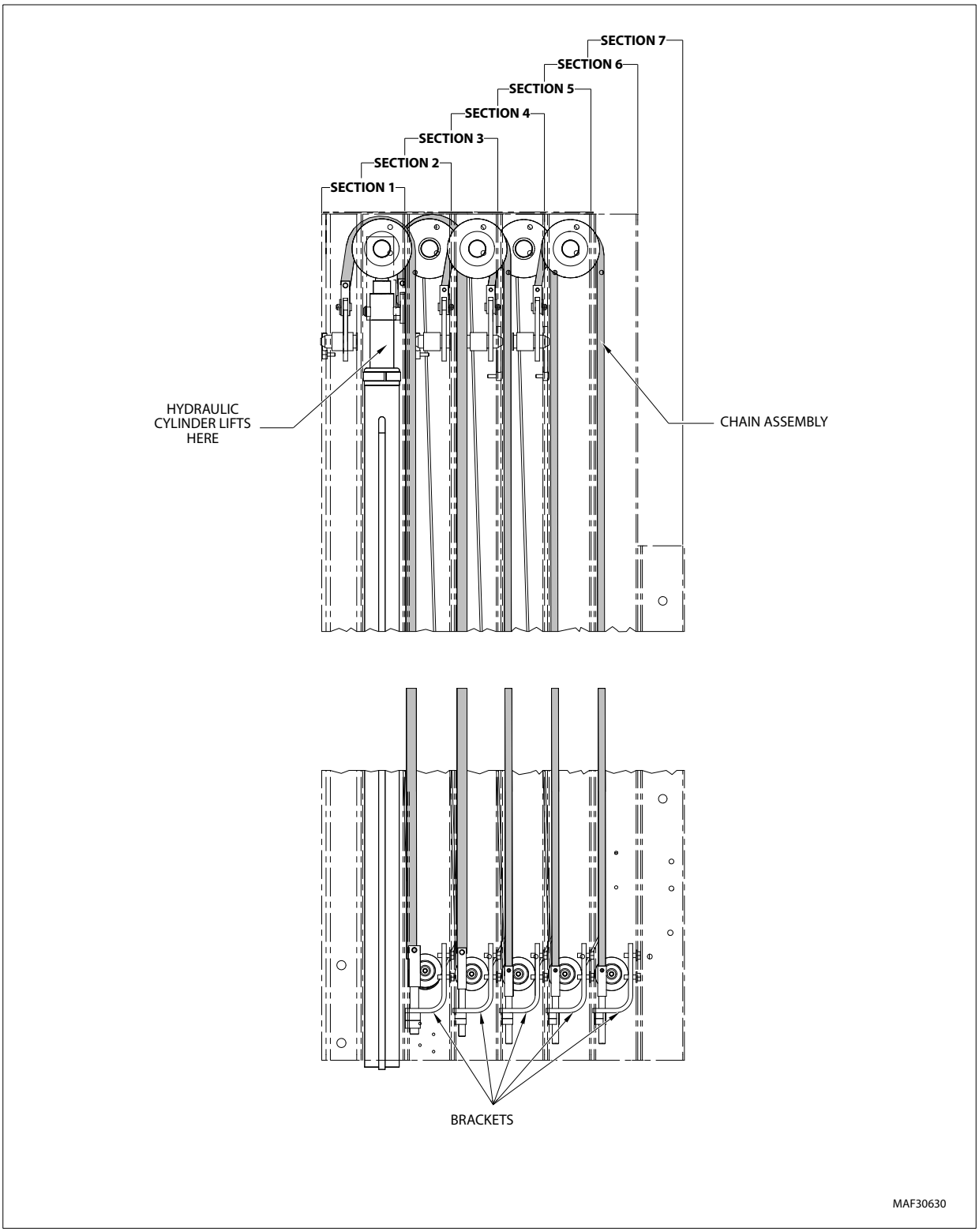

Figure 2-6. Mast Chain/Cable Routing Diagram

d. When mast slide pads are shimmed properly, there should be no side to side movement of slide pad in rail channel. Mast sections should be snug in channels but still be able to slide in channel by hand.

8. Insert slide pads into the slide pad channels *(top of mast)* between section-1 and -2, (*one on each side of the mast)*, with beveled surface facing in towards section-2.

NOTE: *Before fastening and shimming the slide pad on the top left side of the mast, install a sequence cable bracket against the mast under the flatwasher.*

9. Thread slide pad attaching bolts, two (2) 1/4 in. x 7/8 in. long hex head bolts, place a flat washer under head of each bolt, through holes in mast section-1 outside rail *(top of mast)* and into the slide pad inserts. Thread in enough to hold pad in place.
10. Shim per instructions in step 7, Mast Section 2 - Assembly.

NOTE: *If hydraulic cylinder needs to be extended, the protective caps on the extend and return ports will need to be removed. Be careful not to nick or scour rod surface when extending, also catch any oil draining out of cylinder to avoid spillage onto work area.*

11. Locate the hydraulic lift cylinder, slide the lift cylinder into the closed rail side of mast section-2 with rod end to top and port end to bottom of mast. Cylinder should extend out of mast on both ends. Mount the cylinder with the manual descent valve assembly facing the back of the mast, towards mast section-1.
12. Install the cylinder mounting plates at the bottom of the mast section-1. Mount plates two each side, using (2) two long pass through bolts and nuts, apply Medium Strength Threadlocking Compound to the bolt threads before tightening nuts.
13. Install the mounting pin through the side mounting brackets and the cylinder valve body and through the mounting brackets on the other side of the mast. Install the snap rings to each end of the mounting pin.
14. Insert hydraulic cylinder rod end into chain assembly anchor block. Secure cylinder rod to anchor block with a chain equalizer and snap ring. Apply Medium Strength Threadlocking Compound.
15. Locate chain assembly *(single anchor block with two narrow chains)*. Lay out chain assembly with anchor block end towards mast, *(be certain floor surface is clean and free of any metal chip or debris which may stick to lubricated chains or lay chains in a clean bucket)*.
16. Slide mast section-2 out of mast section-1 approximately one foot.
17. Assemble chain sheaves on chain assembly anchor block *(attached to cylinder rod end)* and attach to mast section-2 using following steps;
    a. Insert sheave pin through anchor block on cylinder rod end.
    b. Place sheave wheels *(for wide chain)* on sheave pin, one each side of anchor block.
    c. On outside of each sheave wheel, place a sheave pin attach bar, *(rectangular plate with threaded holes on each side of pin bore hole)*.
    d. Slide the whole anchor block assembly with sheave pin, wheels and pin attach bars into top of mast section-2. *(Position anchor block with narrow chains facing mast section-3)*.
    e. Attach to top of mast section-2 using two (2) 3/8 in. x 1/2 in. long socket head-countersunk-flathead cap screws each side. Apply Medium Strength Threadlocking Compound.
18. Slide mast section-2 back into section-1 until end are even.

Mast Section 3 - Assembly *(All Masts)*

NOTE: *When sliding mast sections together, be careful not to scratch or score the anodized finish in the slide pad channels.*

19. Locate mast section-3, carefully slide section-3 closed rail into section-2 open rail. Slide sections together until ends are even.
20. Locate one (1) of the attach bracket (one with threaded holes horizontally aligned to outside of bracket). Attach using outer set of holes in bottom of mast section-3 with Four (4) 1/4 in. x 3/4 in. long bolts, place a flatwasher under head of each bolt.
21. Slide mast section-3, approximately two feet out of the top of mast section-2.
22. Insert threaded ends of chain assembly *(attached to top of mast section-1)*, through holes in bracket attached to bottom of mast section-3. Loosely thread two (2) 1/2 in. nuts onto stud threads on each chain. Chains will be adjusted later in assembly.
23. Locate two cable assemblies. Attach the chain anchor block to lift cylinder using chain equalizer and snap ring. Attach end of each cable to the top of mast section-3 using two (2) pins to the chain anchor block.
24. Assemble chain sheaves *(for narrow chain assembly)* to top of mast section-3 as follows;
    a. Locate the two (2) narrow chain sheave wheels and slide onto sheave pin.
    b. Slide two (2) short spacer tubes onto sheave pin, one each end of sheave pin to outside of sheave wheels.
    c. Place two (2) sheave pin attach bars, one each end of sheave pin to outside of space tubes.
    d. Holding complete sheave wheel assembly, slide assembly into top of mast section-3 and align threaded holes in sheave pin attach bars with holes in mast rails.
    e. Attach to top of mast section-3 using two (2) 3/8 in. x 3/4 in. long socket head-countersunk-flathead cap screws, each side. Apply Medium Strength Threadlocking Compound.

NOTE: *When sliding mast sections together, be careful not to scratch or score the anodized finish in the slide pad channels.*

25. Carefully slide mast section-3 into section-2 until ends are even. Check to make sure chain assembly *(wide chains)* are seating properly in chain anchor block chain sheave wheels attached to mast section-2.
26. Insert slide pads into the top end mast rails between section-2 and -3, *(one on each side of the mast)*, with beveled surface facing inward towards section-3.

NOTE: *Before fastening and shimming the slide pad on the top left side of the mast, install a sequence cable bracket against the mast under the flatwasher.*

27. Thread slide pad attaching bolts, two (2) 1/4 in. x 7/8 in. long hex head bolts, place a flat washer under head of each bolt, through holes in outside rail, on top of mast section-2 and into the slide pad inserts. Thread in enough to hold pad in place.
28. Shim per instructions in step 7, Mast Section 2 - Assembly.
29. Insert slide pads into the bottom end mast rails between section-2 and -3, *(one on each side of the mast)*, with beveled surface facing out towards section-2.
30. Thread slide pad attaching bolts, two (2) 1/4 in. x 3/4 in. long hex head bolts, place a flat washer under head of each bolt, through holes on inside rail, on bottom end of mast section-3 and into the slide pad inserts. Thread in enough to hold pad in place.
31. Shim per instructions in step 7, Mast Section 2 - Assembly.

Mast Section 4 - Assembly *(All Masts)*

NOTE: *When sliding mast sections together, be careful not to scratch or score the anodized finish in the slide pad channels.*

32. Locate mast section-4, carefully slide section-4 closed rail into section-3 open rail. Slide sections together until ends are even.
33. Locate one (1) of the attach bracket (one with threaded holes horizontally aligned to outside of bracket). Attach using outer set of holes in bottom of mast section-3 with three (3) 1/4 in. x 3/4 in. long bolts, place a flatwasher under head of each bolt.
34. Slide mast section-4 out the top of mast section-3 so the bracket on bottom of mast section-4 is easily accessible at top end of mast section-3. Rest the top end of mast section-4 on a support while performing next step.
35. Insert threaded ends of chain assembly *(attached to anchor block on top mast section-2)* through the bracket located on bottom of extended mast section-4. Loosely thread two (2) 3/8 in. nuts onto stud threads on each chain. Chains will be adjusted later in assembly.
36. Insert chain adjustment into the top of mast section-4 by using spacer, chain equalizer and Keeper. Secure one end of the chain assembly with chain adjustment by using two (2) pin, cotter pin and washer.
37. While mast section-4 is still extended from section-3, assemble cable sheaves to top of mast section-4 as follows;
    a. Locate the wide tube spacer and slide onto sheave pin.
    b. Slide two (2) cable sheave wheels onto sheave pin, one each end of sheave pin to outside of tube spacer.
    c. Place two (2) thrust washers, one each end of sheave pin to outside of cable sheave wheels.
    d. Place two (2) sheave pin attach bars, one each end of sheave pin to outside of large flatwashers.
    e. Holding complete cable sheave wheel assembly, slide assembly into top of mast section-4 and align threaded holes in sheave pin attach bars with holes in mast rails.
    f. Attach to top of mast section-4 using two (2) 3/8 in. x 1/2 in. long socket head-countersunk-flathead cap screws, each side. Apply Medium Strength Threadlocking Compound and tighten.

NOTE: *When sliding mast sections together, be careful not to scratch or score the anodized finish in the slide pad channels.*

38. Carefully slide mast section-4 back into section-3 until ends are even. Check to make sure chain assembly *(narrow chains)* are seating properly in chain sheave wheels attached to top of mast section-3.
39. Insert slide pads into the top end mast rails between section-3 and -4, *(one on each side of the mast)*, with beveled surface facing inward towards section-4.

NOTE: *Before fastening and shimming the slide pad on the top left side of the mast, install a sequence cable bracket against the mast under the flatwasher.*

40. Thread slide pad attaching bolts, (two (2) 1/4 in. x 7/8 in. long hex head bolts, place a flat washer under head of each bolt), through holes in outside rail, on top of mast section-3 and into the slide pad inserts. Thread in enough to hold pad in place.
41. Shim per instructions in step 7, Mast Section 2 - Assembly.
42. Insert slide pads into the bottom end mast rails between section-3 and -4, (one on each side of the mast), with beveled surface facing out towards section-3.
43. Thread slide pad attaching bolts, (two (2) 1/4 in. x 3/4 in. long hex head bolts, place a flat washer under head of each bolt), through holes on inside rail, on bottom end of mast section-4 and into the slide pad inserts. Thread in enough to hold pad in place.
44. Shim per instructions in step 7, Mast Section 2 - Assembly.

Mast Section 5 - Assembly *(All Masts)*

NOTE: *When sliding mast sections together, be careful not to scratch or score the anodized finish in the slide pad channels.*

45. Locate mast section-5, carefully slide section-5 closed rail into section-4 open rail. Slide sections together until ends are even.
46. Locate one (1) of the attach bracket (one with threaded holes horizontally aligned to outside of bracket). Attach to the bottom of section-5 using outer set of holes in bottom of mast section-5 with four (4) 1/4 in. x 3/4 in. long bolts, place a flatwasher under head of each bolt.
47. Slide mast section-5 out the top of mast section-4 so the bracket on bottom of mast section-5 is easily accessible near top end of mast section-4. Rest the top end of mast section-5 on a support while performing next step.
48. Insert threaded ends of cable assembly *(attached to top of mast section-3)* through the bracket located on bottom of extended mast section-5. Loosely thread two (2) 3/8 in. nuts onto stud threads on each chain. Chains will be adjusted later in assembly.

NOTE: *When sliding mast sections together, be careful not to scratch or score the anodized finish in the slide pad channels.*

49. Slide mast section-5 back into section-4 except for a foot or two of length.
50. Insert chain adjustment into the top of mast section-5 by using spacer, chain equalizer and Keeper. Secure one end of the chain assembly with chain adjustment by using two (2) pin, cotter pin and washer.
51. While mast section-5 is still extended from section-4, assemble cable sheaves to top of mast section-5 as follows;
    a. Locate remaining sheave pin. Slide two (2) cable sheave wheels onto sheave pin and center.
    b. Place two (2) short spacer tubes on sheave pin, one on each end of sheave pin to outside of sheave wheels.
    c. Place two (2) sheave pin attach bars, one on each end of sheave pin to outside of short spacer tubes.
    d. Holding complete cable sheave wheel assembly, slide assembly into top of mast section-5 and align threaded holes in sheave pin attach bars with holes in mast rails.
    e. Attach to top of mast section-5 using two (2) 3/8 in. x 1/2 in. long socket head-countersunk-flathead cap screws, each side. Apply Medium Strength Thread-locking Compound.

NOTE: *When sliding mast sections together, be careful not to scratch or score the anodized finish in the slide pad channels.*

52. Carefully slide mast section-5 back into section-4 until ends are even. Check to make sure cable set from top of section-3 is seating properly in cable sheave wheels attached to top of mast section-4. *(Mast sections-2, -3 and -4 may need to be restrained to keep their slide pads from pushing out the bottom of mast sections-1, -2 and -3)*.
53. Insert slide pads into the top end mast rails between section-4 and -5, *(one on each side of the mast)*, with beveled surface facing inward towards section-5.

NOTE: *Before fastening and shimming the slide pad on the top left side of the mast, install a sequence cable bracket against the mast under the flatwasher.*

54. Thread slide pad attaching bolts, (two (2) 1/4 in. x 7/8 in. long hex head bolts, place a flat washer under head of each bolt), through holes in outside rail, on top of mast section-4 and into the slide pad inserts. Thread in enough to hold pad in place.
55. Shim per instructions in step 7, Mast Section 2 - Assembly.
56. Insert slide pads into the bottom end mast rails between section-4 and -5, (one on each side of the mast), with beveled surface facing out towards section-4.
57. Thread slide pad attaching bolts, (two (2) 1/4 in. x 3/4 in. long hex head bolts, place a flat washer under head of each bolt), through holes on inside rail, on bottom end of mast section-4 and into the slide pad inserts. Thread in enough to hold pad in place.
58. Shim per instructions in step 7, Mast Section 2 - Assembly.

Mast Section 6 - Assembly *(25 ft. Masts)*

59. Locate mast section-6, carefully slide section-6 closed rail into section-5 open rail. Slide sections together until ends are even.
60. Locate one (1) of the attach bracket (one with threaded holes horizontally aligned to outside of bracket). Attach to the bottom of section-6 using outer set of holes in bottom of mast section-5 with three (3) 1/4 in. x 3/4 in. long bolts, place a flatwasher under head of each bolt.
61. Slide mast section-6 out the top of mast section-5 so the bracket on bottom of mast section-6 is easily accessible near top end of mast section-5. Rest the top end of mast section-6 on a support while performing next step.
62. Insert threaded ends of cable assembly *(attached to top of mast section-4)* through the bracket located on bottom of extended mast section-6. Loosely thread two (2) 3/8 in. nuts onto stud threads on each chain. Chains will be adjusted later in assembly.
63. Slide mast section-6 back into section-5 except for a foot or two of length.
64. While mast section-6 is still extended from section-5, assemble cable sheaves to top of mast section-6 as follows;
    a. Slide two (2) cable sheave wheels onto sheave pin, one each end of sheave pin to outside of tube spacer.
    b. Place two (2) sheave pin attach bars, one on each end of sheave pin to outside of short spacer tubes.
    c. Holding complete cable sheave wheel assembly, slide assembly into top of mast section-6 and align threaded holes in sheave pin attach bars with holes in mast rails.

d. Attach to top of mast section-6 using two (2) 3/8 in. x 1/2 in. long socket head-countersunk-flathead cap screws, each side. Apply Medium Strength Thread-locking Compound and tighten.

NOTE: *When sliding mast sections together, be careful not to scratch or score the anodized finish in the slide pad channels.*

65. Carefully slide mast section-6 back into section-5 until ends are even. Check to make sure cable set from top of section-4 is seating properly in cable sheave wheels attached to top of mast section-5. *(Mast sections-3, -4 and -5 may need to be restrained to keep their slide pads from pushing out the bottom of mast sections-2, -3 and -4)*.
66. Insert slide pads into the top end mast rails between section-5 and -6, *(one on each side of the mast)*, with beveled surface facing inward towards section-6.

NOTE: *Before fastening and shimming the slide pad on the top left side of the mast, install a sequence cable bracket against the mast under the flatwasher.*

67. Thread slide pad attaching bolts, *(two (2) 1/4* in. *x 7/8* in. *long hex head bolts, place a flat washer under head of each bolt)*, through holes in outside rail, on top of mast section-5 and into the slide pad inserts. Thread in enough to hold pad in place.
68. Shim per instructions in step 7, Mast Section 2 - Assembly.
69. Insert slide pads into the bottom end mast rails between section-5 and -6, *(one on each side of the mast)*, with beveled surface facing out towards section-5.
70. Thread slide pad attaching bolts, (two (2) 1/4 in. x 3/4 in. long hex head bolts, place a flat washer under head of each bolt), through holes on inside rail, on bottom end of mast section-4 and into the slide pad inserts. Thread in enough to hold pad in place.
71. Shim per instructions in step 7, Mast Section 2 - Assembly.

Platform Mounting Section - Assy. *(All Masts)*

NOTE: *Reference to mast sections -6/-7 made following is dependent on which model machine you are servicing since the 25 ft. machines use six (6) mast sections, the 30 and 38 ft. models use seven (7) mast sections.*

72. Locate the remaining mast section -6/-7 *(platform mounting - mast section)*. Lay mast section on flat stable surface.
73. Attach the remaining bracket. Attach through inner *(vertical)* set of holes in bottom of mast section -6/-7 with two (2) 1/4 in. x 3/4 in. long bolts, place a flatwasher under head of each bolt.

NOTE: *The platform mounting section slide pads, are assembled differently than the slide pads for the other mast sections. Mast section -6/-7 slide pads may need to be assembled/disassembled several times in order to determine the correct shim stock required for proper fit.*

74. Complete the following steps to determine shim stock thickness required for section -6/-7;

NOTE: *Always use the an even amount of shim material behind slide pads on both sides of the mast rails. This will keep mast sections centered in rail channels and prevent any distortion of the section.*

a. Use two shim pieces per slide pad, a thick one and a thin one.
b. Start with a total thickness of approximately 0.035 in. and 0.075 in. thick shim stock.
c. Attach shim stock and slide pads to both sides of mast section -6/-7 using four (4) 1/4 in. x 1-1/4 in. long, hex head cap screws per side, with flatwasher under each bolt head. *(Assemble shim stock and slide pad to mast section rail with shim stock against rail and slide pad with beveled side out)*.
d. Carefully thread the slide pad mounting bolts with flatwashers through slide pads and shim stock into threads in mast section -6/-7. Be certain there are no air gaps between shims, shim and mast or shim and slide pad when tightened.

NOTE: *Mast section -6/-7 into section -5/-6 fit should be very snug but still be able to be pushed together by hand. If too tight, remove section -6/-7, disassemble slide pad and reduce thickness of shim stock.*

e. Begin sliding top of mast section -6/-7 with closed rail down engaging the slide pads into slide pad channels at bottom of mast section -5/-6's open rail. Continue to push section -6/-7 into section -5/-6 until BOTTOM ends of mast sections are even.

f. Check mast section for side play. If play exists use thicker shims dividing thickness equally between both sides of mast.

g. When mast slide pads are shimmed properly, there should be no side to side movement of slide pad in rail channel. Mast sections should be very snug in channels but still be able to slide in channel by hand.

75. Slide mast section -6/-7 to top of section -5/-6.
76. Insert threaded ends of cable assembly *(attached to top of mast section-3/-4/-5)* through bracket located on bottom of extended mast section -6/-7. Loosely thread two (2) 3/8 in. nuts onto stud threads on each chain. Apply Medium Strength Threadlocking Compound. Chains will be adjusted later in assembly.
77. Slide mast section -6/-7 back into mast section -5/-6 until bottom ends of masts are even. Check to make sure cable set attached to top of section-3/-4/-5 is seating properly in cable sheave wheels attached to top of mast section-4/-5/-6. *(Mast sections-2, -3, -4 and -5 may need to be restrained to keep their slide pads from pushing out the bottom of mast sections-1, -2, -3, -4 and -5)*.
78. Adjust top and bottom ends of mast sections so they are all even with each other. At bottom of mast assembly, thread all chain/cable adjusting nuts on threaded ends until they are snug against the anchor plates and all slack is removed from chains and cables. Check that chains and cables are seated in their sheave wheels at top of mast assembly.
79. Assemble the latch bar to mast section -6/-7, the mini covers to the top of each mast section and the sequencing cables and hardware to the side of the mast assembly.

Mast assembly should now be complete.

2.11 MAST TO BASE FRAME INSTALLATION

1. Using an overhead crane or suitable lifting device capable of supporting the weight of base frame, attach a sling strap or chain to the front crossmember of the base frame, raise base frame.
2. Extend hydraulic cylinder out from bottom of mast assembly approximately one (1) foot. *(Caps on extend and return ports will need to be removed to extend cylinder. Catch any hydraulic fluid expelled from return port in a container to prevent spillage onto work area)*.
3. Bring base frame into position in front of mast assembly, *(base frame and mast assembly must be held at 90° angle to each other)*.
4. Slide port end of hydraulic cylinder through hole in base frame cylinder mounting channel. *(Return port (tube side) of cylinder must be on right side facing bottom of base and mast)*.
5. Align threaded hole in side of hydraulic cylinder head with hole in tab on bottom side of cylinder mounting channel. Secure hydraulic cylinder to cylinder mounting channel tab using a 5/16 in. x 5/8 in. long hex head bolt and flat washer.
6. Carefully push mast assembly and base assembly together until the four (4) holes on bottom rear of mast align with holes in the base frame mast support crossmember.
7. Attach mast to base using four (4) 3/8 in. x 1 in. long hex head bolts, flatwashers, and nuts. *(place a flatwasher under bolt head, mount with nuts on inside of frame)*. Apply Medium Strength Threadlocking Compound to bolt threads before final tightening of nuts.
8. Before setting machine upright on base, install a short 90° elbow fitting, flow control valve and another short 90° elbow fitting on the end of the flow control valve in the extend *(left)* port on bottom of hydraulic cylinder. Install a long 90° elbow fitting on return *(right)* port. Use sealant tape on fitting threads. Cap ports until hydraulic lines are installed.
9. Carefully set machine in an upright position on its base frame wheels.
10. Locate the mast support bracket. Attach mast support bracket to mounting holes halfway up back of mast using four (4) 3/8 in. x 2-3/4 in. long hex head bolts, locknuts and flatwashers. *(Place a flatwasher under bolt head and nut and mount with nuts on inside of frame)*.
11. Using a 4 ft. level, ensure mast is set to vertical (plumb) on the base frame.
12. When mast is vertical *(plumb)*, attach mast support braces, *(bolted to base and mast support bracket)* using 3/8 in. x 1 in. long hex head bolts and lock nuts.
13. After securing mast to base frame, using 4 ft. level again check that mast is vertical *(plumb)* on base frame.

Mast installation should now be complete.

2.12 MAST CHAINS/CABLES AND SEQUENCING CABLES ADJUSTMENT

Mast Chain/Cable Adjustment

The intention of this procedure is to assure equal load distribution between the individual chains/cables of a mast section chain/cable set. Also to step each front mast section up approximately 7/16 in. *(11mm)* from the section behind it to allow clearance for the individual mast section covers.

Adjust using the following procedure;

1. With mast retracted, step into the platform and bounce your weight up and down a few times to be certain platform is at the bottom of travel. Be certain all chain/cable sets are seated in their sheaves properly at the top of each mast section.
2. Then with no load in the platform check the side profile of the top of the mast for the amount of adjustment necessary to obtain the 7/16 in. *(11mm)* step for mast sections-3 and up. *(See Figure 2-7.)*

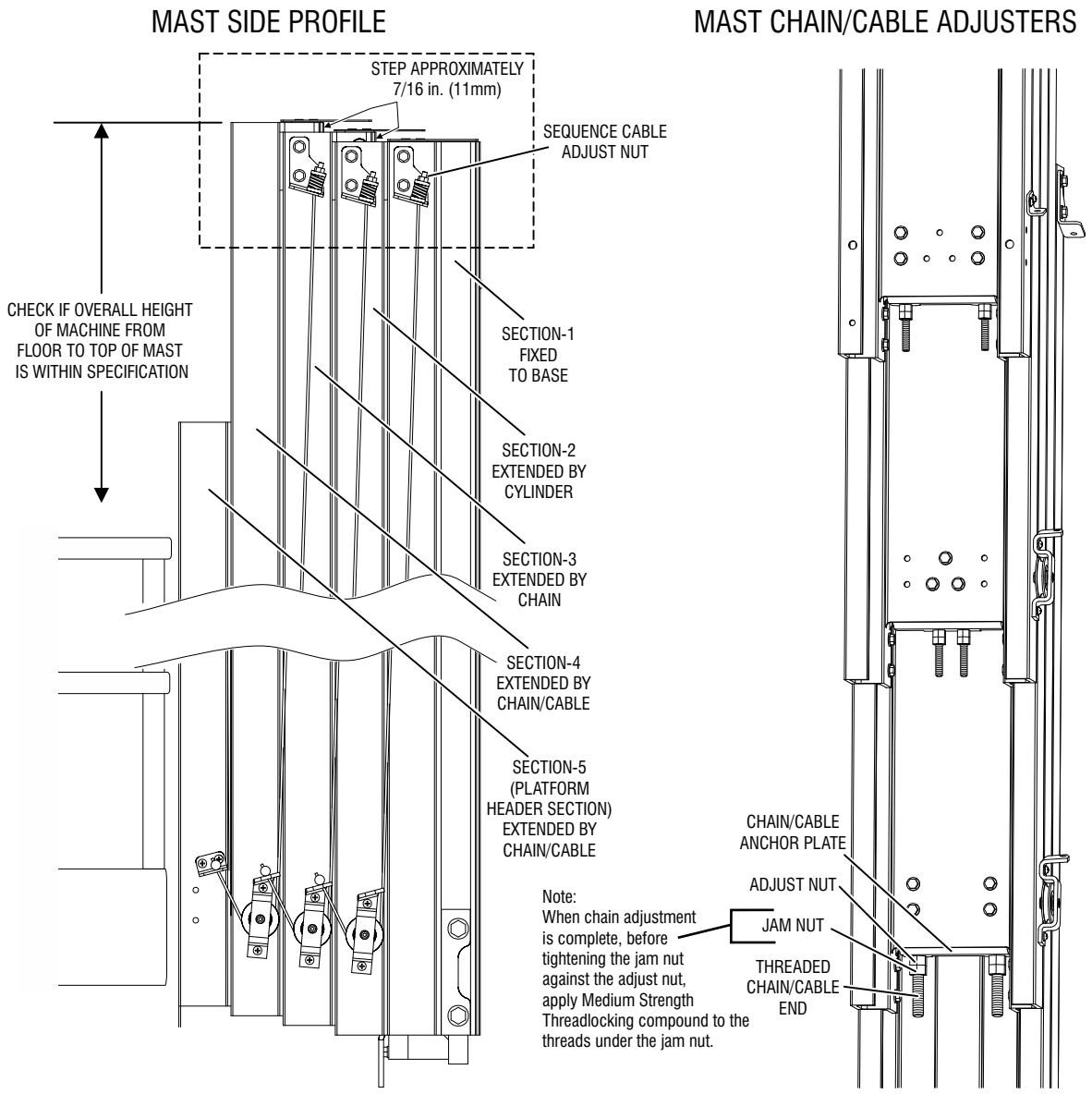

Figure 2-7. Mast Chain/Cable/Sequence Cable Adjustment Components. (Typical)

NOTE: *Mast section-1 is fixed to the base and mast section-2 is attached to the lift cylinder, these sections require no adjustment.*

3. Adjust one mast section at a time starting from the back *(section-3, section-4, etc.)* of the mast and work forward. *(i.e. if three is OK, then jump to four, etc.)*
4. To adjust, elevate the platform until the chain/cable anchor adjust nuts are accessible at the front and bottom of each mast section.

WARNING

NEVER WORK UNDER AN ELEVATED PLATFORM UNTIL PLATFORM HAS BEEN SAFELY RESTRAINED FROM ANY MOVEMENT BY BLOCKING OR OVERHEAD SLING.

5. Start with the mast section which needs adjustment and loosen the bottom *(jam)* nut on each chain/cable.
6. **Tighten** *(to raise mast section),* **or loosen** *(to lower mast section)* **the adjusting nut** against the anchor plate **on each** chain/cable. Adjust the nut the amount required to raise or lower the top of the mast section to match the side profile shown in Figure 2-7. when the mast is retracted. Be certain each chain/cable pair is adjusted to equal tension. *(The threaded end of the chain/cable will need to be restrained while tightening the adjust nut to keep the chain/cable from twisting.)*
7. Retract the mast all the way and check if the top of the mast sections appear as shown in Figure 2-7.
8. Repeat steps (1) through (7) for remaining mast sections. ENSURE THAT ALL CHAIN/CABLE PAIRS HAVE EQUAL TENSION.
9. Once mast section adjustment is completed, apply Medium Strength Threadlocking Compound to the threads under the *(jam)* nuts that were loosened. Then re-tighten the loosened *(jam)* nuts until tight against the top *(adjust)* nut. Chain/cable should have slight tension but should not be taut. Run mast through several cycles to verify cable/chain adjustments and ensure no interference exists between chain anchor brackets and mast.

Sequencing Cable Adjustment

1. Retract mast completely, and check each sequencing cable on outside of masts for excessive slack. Adjust only to remove slack from cable.
2. Tighten nylock-nut just enough to remove excessive slack from sequencing cable. The springs should not be compressed more than 25% after adjusting.

2.13 SEQUENCE CABLE REPLACEMENT KIT

A sequence cable replacement kit is available from the JLG Parts Department to service broken or worn sequence cables. This kit consists of a replacement sequence cable with the threaded *(top)* end attached same as the top end of the factory cable. Also included is a clamp *(drum/socket type)* to secure the bottom end of the cable. Use the following procedure to install the replacement cable and clamp kit.

Remove Old Cable

1. Remove the locking nut from the threaded end of the cable at the top of the mast and then remove the spring cap, spring, and spacer washers if installed.
2. Slide the threaded top end out of the upper anchor bracket, then at the bottom end pull the cable out though the sheave pulley/anchor bracket until it is completely clear of the machine.

Replacement Cable Installation

1. Be certain the mast is completely retracted and at the bottom of travel. Check the mast "Side Profile" at the top of the mast as shown in Figure 2-7., adjust mast sections to proper height if necessary.
2. To determine where the clamp will be installed at the bottom of the replacement cable, temporarily assemble the new replacement cable to the top cable anchor bracket on the mast using the washers, spring, spring cap and lock nut previously disassembled. Thread the lock nut on until approximately 1/8 in. *(3mm)* of threads are exposed.
3. At the bottom of the mast, thread the loose end of the replacement cable through the proper sheave pulley and through the hole in the sheave pulley/anchor bracket on the mast section ahead of the sheave pulley.
4. Grasp the cable and pull on the cable until the spring at the top of the cable is slightly compressed. Use a black marker to mark the cable on the top side of the sheave pulley/anchor bracket. This will determine where the clamp *(drum/socket)* sleeve will be positioned on the cable.

NOTICE

DO NOT CUT THE CABLE AT THE MARKED POINT ON THE CABLE THIS IS ONLY USED AS A REFERENCE FOR POSITIONING THE CABLE SLEEVE WHICH WILL REST AGAINST THE ANCHOR BRACKET ONCE INSTALLED.

Clamp Installation (Drum/Socket Type)

NOTICE

THE MANUFACTURER OF THE DRUM/SOCKET CLAMP RECOMMENDS THE USE OF THEIR CABLE CLAMP ASSEMBLY KIT (JLG PN - 7023275) TO ASSEMBLE THE CLAMP TO THE WIRE ROPE. THE KIT CONSISTS OF VISE JAWS TO HOLD THE WIRE ROPE IN A VISE PROPERLY WITHOUT DAMAGING ANY ROPE STRANDS AND A PLUG DRIVER TO DRIVE THE PLUG INTO THE CENTER OF THE WIRE ROPE AND IS ALSO USED TO FORM THE STRANDS OF THE ROPE DURING ASSEMBLY.

NOTE: *The tools in the clamp assembly kit may be fabricated if necessary. The vise clamp consists of vise jaws with a hole drilled 1/32 in. smaller than the diameter of the wire rope you are working with (i.e. 1/8 in. rope - 3/32 in. hole.)*
The plug driver is a metal tube with a hole in the bottom to allow the strands of the wire rope to be shaped after the plug has been tapped into the center of the wire rope.

1. Using the recommended vise jaws, clamp the wire rope into a vise with the bottom edge of the black mark made on the wire rope resting just above the vise jaws.

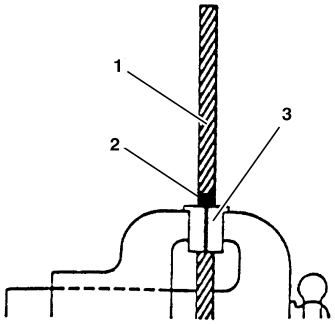

2. Twist the sleeve from the clamp kit onto the rope until it is flat against the vise jaws at the mark made on the wire rope.

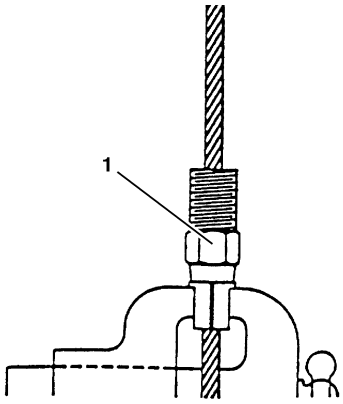

3. Use a suitable tool and cut the cable as shown in the illustration following. For 1/8 in. cable the recommended length is 5/8 in. past the end of the sleeve.

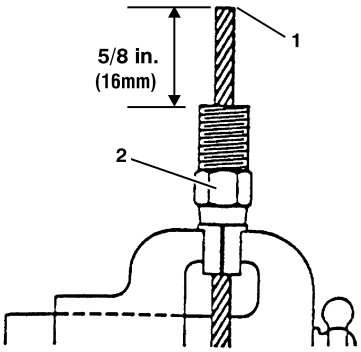

4. Unlay the cable strands by gently forcing a screwdriver between the outer strands to unlay the cable. When done properly the outer strands will form a symmetrical basket. Do not straighten out the spiral lay of the strands, unlay any wires that make up the strand, or allow the strands to cross each other inside the sleeve.

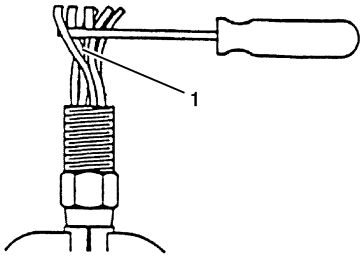

5. Install the plug supplied with the kit by placing the plug in the center of the strands starting with the small tapered end of the plug. Use a metal tube (plug driver) and hammer to drive the plug into the sleeve while assuring that the strands are spaced somewhat equally around the plug. Drive the plug until it is firmly seated and no more than 1/3 of the plug is visible from above the sleeve.

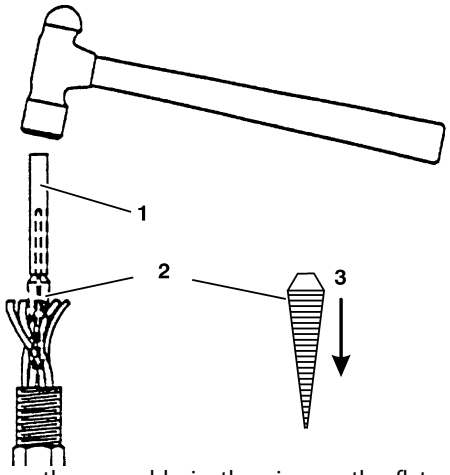

6. Reclamp the assembly in the vise on the flats of the sleeve. Using the plug driver, a metal tube or pliers, bend the outer strands toward the center strands enough that the socket can be slipped over all the strands.

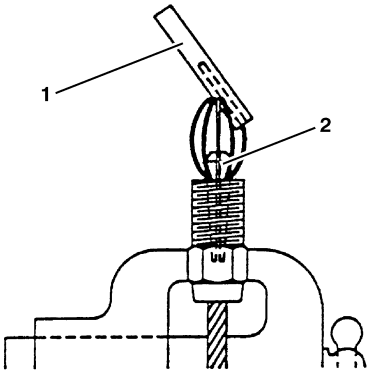

NOTE: *When assembling stainless steel parts all threads must be coated with a dry lubricant or an anti-sieze lubricant to prevent seizing.*

7. Coat the threads of the socket and sleeve with lubricant and install the socket by twisting it over the strands of the cable and engage the threads of the sleeve with the socket. Tighten until four threads or fewer are visible. If more than four threads are visible, proof load the cable and retighten the socket fitting. (There is no specific requirement for torque.)

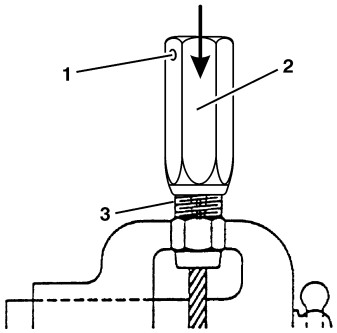

8. Inspect for proper assembly prior to loading the cable. Strands visible through the inspection hole are your assurance of a proper assembly.

NOTE: *The end of the rope may not be visible in the inspection hole after loading.*

9. Install cable on machine and adjust per instructions shown previously in Section 2.12, Mast Chains/cables And Sequencing Cables Adjustment.

2.14 Load Sensing System (LSS)

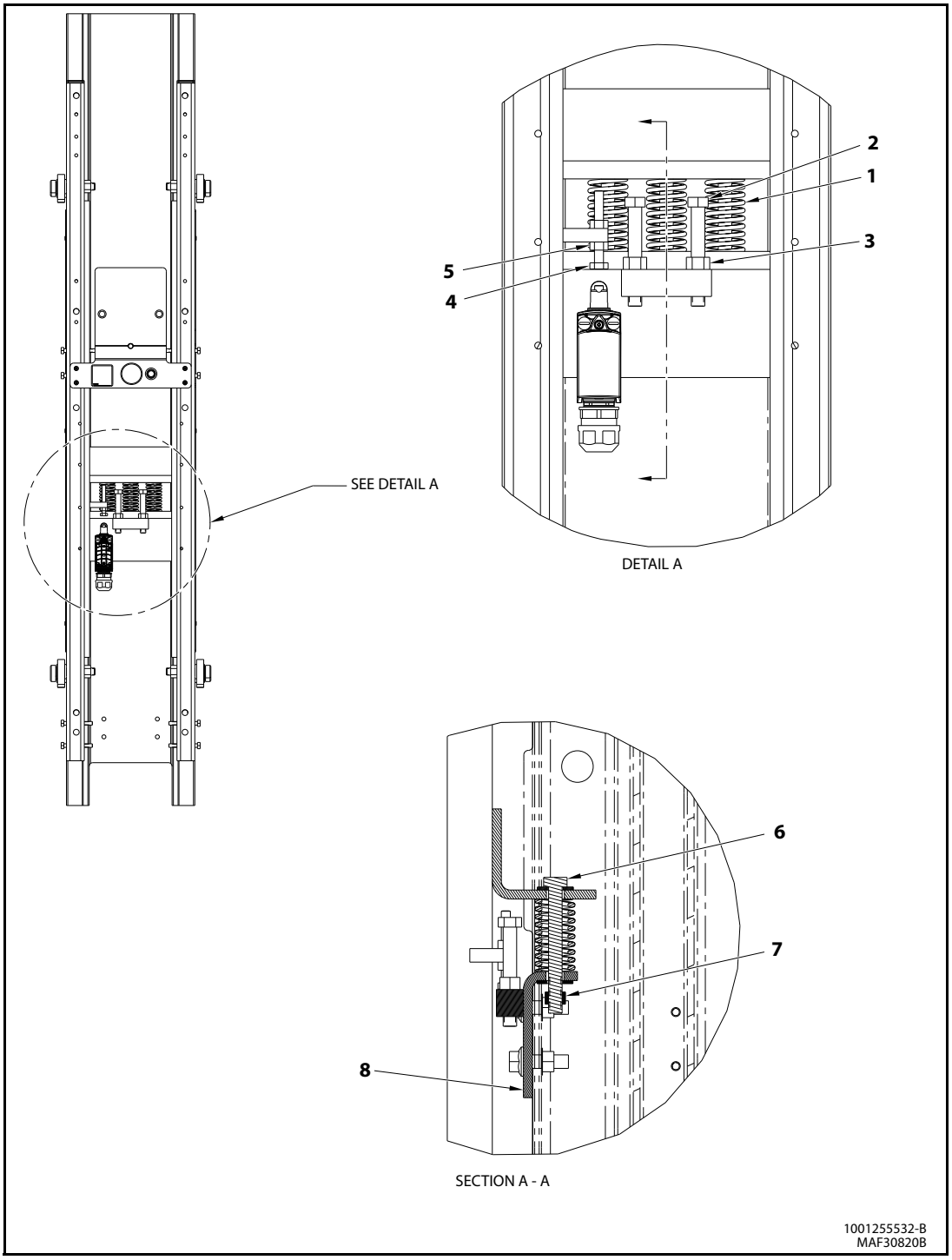

1. Coil Spring
2. Capscrew
3. Lock Nut
4. Bolt
5. Nut
6. Capscrew
7. Lock Nut
8. Support

Figure 2-8. Load Sensing System (LSS)

Setting Spring Pre-Load

1. Adjust the height of the coil springs (1) to 2.250 in. by tightening the capscrew (6) and lock nut (7) (using center capscrew and lock nut).
2. Tighten remaining outside capscrews (6) and lock nuts (7) until lock nuts (7) are flush with end of capscrews (6).

NOTE: *Outside capscrews will be loose.*

Setting Positive Stops

3. Load platform with 120% rated load.
4. For Bolt-On Platform adjust capscrews (2) with 1/32 in. to 1/16 in. air gap between capscrews (6) head and angle on washer (8).
5. Lock capscrews (2) with nuts (3) after adjustment.

Adjusting Switch

6. Load platform with 105% of the total rated capacity.
7. Align center of bolt (4) with plunger.
8. Adjust bolt (4) down until switch contact opens.
9. After adjusting bolt (4) lock with nut (5).

SECTION 3. TROUBLESHOOTING

3.1 GENERAL

This section contains troubleshooting information to be used for locating and correcting most operating problems. If a problem should develop which is not presented in this section or which is not corrected by listed corrective actions, technically qualified guidance should be obtained before proceeding with any maintenance.

3.2 TROUBLESHOOTING INFORMATION

Troubleshooting procedures applicable to this machine are listed and defined starting with Table 3-1 and Table 3-2 in this section of the manual.

Each malfunction within an individual group or system is followed by a listing of probable causes which will enable determination of the applicable remedial action. The probable causes and the remedial action should, where possible, be checked in the order listed in the troubleshooting tables.

It should be noted that there is no substitute for a thorough knowledge of the equipment and related systems.

It should be recognized that the majority of the problems arising in the machine will be centered in the hydraulic and electrical systems. For this reason, every effort has been made to ensure that all likely problems in these areas are given the fullest possible treatment. In the remaining machine groups, only those problems which are symptomatic of greater problems which have more than one probable cause and remedy are included. This means that problems for which the probable cause and remedy may be immediately obvious are not listed in this section.

The first rule for troubleshooting any circuit that is hydraulically operated and electrically controlled is to determine if the circuit is lacking hydraulic oil and electrical control power. This can be ascertained by overriding the bypass valve *(mechanically or electrically)* so that oil is available to the function valve, then overriding the function valve mechanically. If the function performs satisfactorily, the problem exists with the control circuit.

3.3 HYDRAULIC CIRCUIT CHECKS

The first reference for improper function of a hydraulic system, where the cause is not immediately apparent, should be the Hydraulic Diagram Circuit. The best place to begin the problem analysis is at the power source *(pump)*. Once it is determined that the pump is serviceable, then a systematic check of the circuit components, would follow.

NOTE: *For aid in troubleshooting, refer to Figure 3-6. for HYDRAULIC DIAGRAM circuit.*

3.4 ELECTRICAL SYSTEM - MULTIMETER BASICS

A wide variety of multimeters or Volt Ohm Meters (VOM) can be used for troubleshooting your equipment. A digital meter with reasonable accuracy (within 7%) is recommended for the measurements in these procedures. This section shows diagrams of a common, digital VOM configured for several different circuit measurements. Instructions for your VOM may vary. Please consult the meter operation manual for more information.

Grounding

"Grounding the meter" means to take the black lead (which is connected to the COM (common) or negative port) and touch it to a good path to the negative side of the voltage source.

Backprobing

To "backprobe" means to take the measurement by accessing a connector's contact on the same side as the wires, the back of the connector. Readings can be done while maintaining circuit continuity this way. If the connector is the sealed type, great care must be taken to avoid damaging the seal around the wire. It is best to use probes or probe tips specifically designed for this technique, especially on sealed connectors. Whenever possible insert probes into the side of the connector such that the test also checks both terminals of the connection. It is possible to inspect a connection within a closed connector by backprobing both sides of a connector terminal and measuring resistance. Do this after giving each wire a gentle pull to ensure the wires are still attached to the contact and contacts are seated in the connector.

Min/Max

Use of the "Min/Max" recording feature of some meters can help when taking measurements of intermittent conditions while alone. For example, you can read the voltage applied to a solenoid when it is only operational while a switch, far from the solenoid and meter, is held down.

Polarity

Finding a negative voltage or current reading when expecting a positive reading frequently means the leads are reversed. Check what reading is expected, the location of the signal and that the leads are connected to the device under test correctly. Also check that the lead on the "COM" port goes to the ground or negative side of the signal and the lead on the other port goes to the positive side of the signal.

Scale

M = Mega = 1,000,000 * (Displayed Number)

k = kilo = 1,000 * (Displayed Number)

m = milli = (Displayed Number) / 1,000

µ = micro = (Displayed Number) / 1,000,000

Example: 1.2 kΩ = 1200 Ω

Example: 50 mA = 0.05 A

Continuity Measurement Over Long Distances

When trying to determine continuity of a harness or wire, longer than the reach of standard instrument leads, is possible to perform the check without excessively long leads. Using the other wires in the harness one can determine the condition of a particular wire in the harness.

Requirements:

- Harness with at least three separate wires including the wire under test.
- These wires must be able to be isolated from other wires, etc.
- Jumper or method to connect contacts on one side of harness.
- Meter that can measure resistance or continuity.

Procedure

Test multimeter leads resistance. Subtract this value from the measured resistance of the wires to get a more accurate measurement.

Consult the circuit schematic to determine which wires to use in addition to wire under test, here called wire #1 and wire #2, and how to isolate these wires. These wires should appear in the same connectors as the wire under test or are within reach of the jumper.

1. Disconnect all connections associated with the wire under test and the two additional wires. If harness is not completely isolated disconnect battery terminals also, as a precaution.
2. Measure continuity between all three wires, the wire under test, wire #1 and wire #2. These should be open. If not, repair the shorted wires or replace the harness.
3. On one side, jumper from contact of wire #1 and wire #2.
4. Measure continuity between wire #1 and wire #2. If there is continuity, both wires are good and can be used for this test. If there is not continuity, either wire could be bad. Check connections and measurement setup. Redo measurement. If still no continuity, repair wires or consult schematic for other wires to use for test.
5. Jumper from wire under test to wire #1.
6. Measure continuity. If there is continuity, the wire under test is good. Resistance of a wire increases as the length increases and as the diameter decreases.

One can find the continuity of two wires, here #1 and #2, at once by following steps 1 through 4. If there is a problem the third wire is used to troubleshoot the other wires. To find the problem, start at step 1 and use the entire procedure.

Voltage Measurement

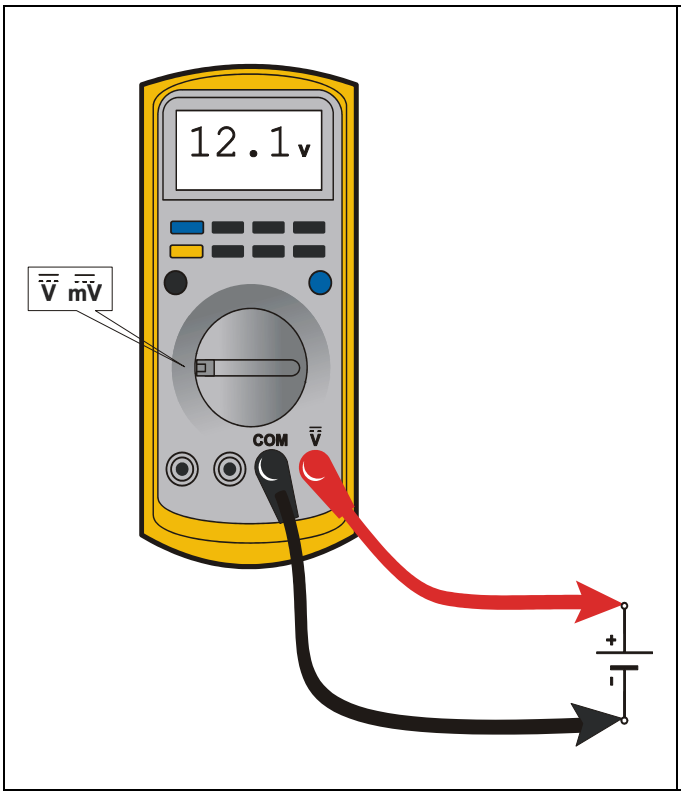

Figure 3-1. Voltage Measurement (DC)

- If meter is not auto ranging, set it to the correct range (See multimeter's operation manual)
- Use firm contact with meter leads

Resistance Measurement

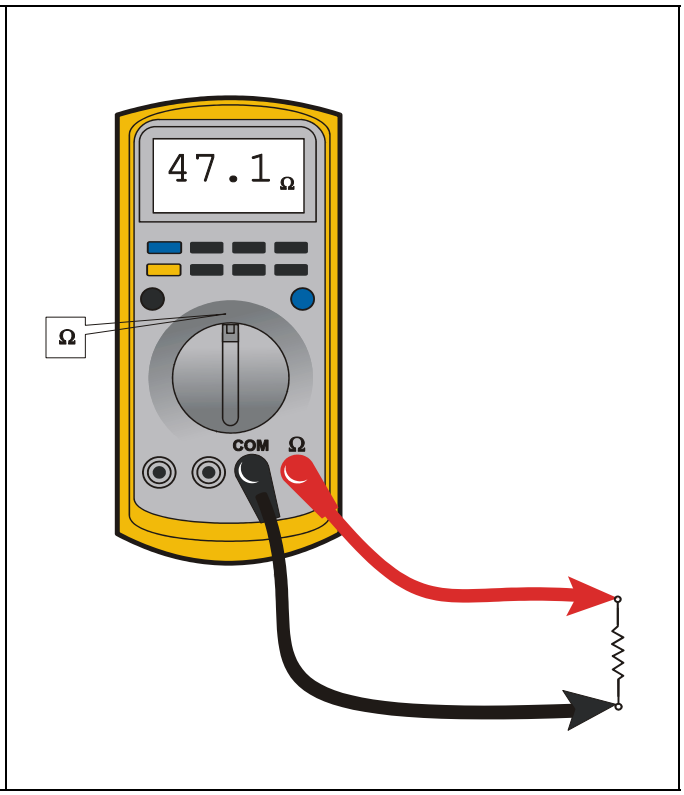

Figure 3-2. Resistance Measurement

- First test meter and leads by touching leads together. Resistance should read a short circuit (very low resistance)
- Circuit power must be turned OFF before testing resistance
- Disconnect component from circuit before testing
- If meter is not auto ranging, set it to the correct range (See multimeter's operation manual)
- Use firm contact with meter leads

Continuity Measurement

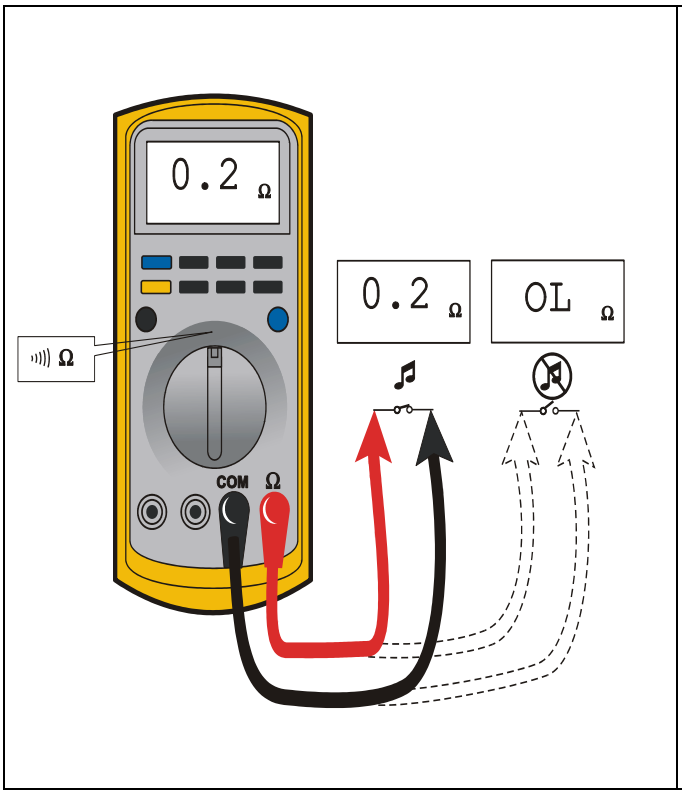

Figure 3-3. Continuity Measurement

- Some meters require a separate button press to enable audible continuity testing
- Circuit power must be turned OFF before testing continuity
- Disconnect component from circuit before testing
- Use firm contact with meter leads
- First test meter and leads by touching leads together. Meter should produce an audible alarm, indicating continuity

Current Measurement

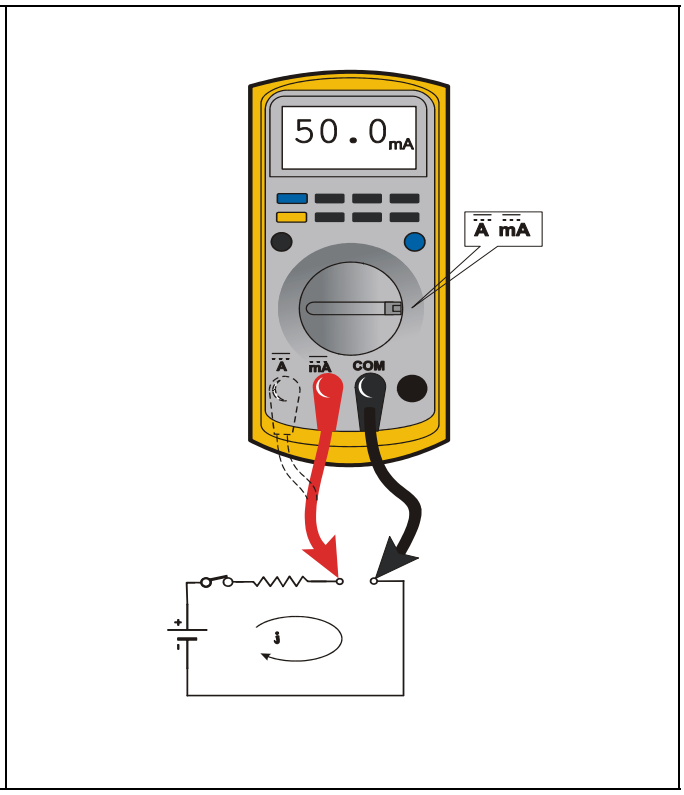

Figure 3-4. Current Measurement (DC)

- Set up the meter for the expected current range
- Be sure to connect the meter leads to the correct jacks for the current range you have selected
- If meter is not auto ranging, set it to the correct range (See multi meter's operation manual)
- Use firm contact with meter leads

3.5 ELECTRICAL SWITCH TESTING

Basic Check

The following check determines if the switch is functioning properly, not the circuit in which the switch is placed. A switch is functioning properly when there is continuity between the correct terminals or contacts only when selected.

1. De-energize the circuit.
2. Isolate the switch from the rest of the circuit if possible. If not possible, keep in mind it may affect readings.
3. Access the terminals to the switch.
4. If the switch has two terminals:
   a. Measure resistance across the terminals.
   b. Change the switch position.
   c. Measure resistance again with the leads in the same positions. If the meter was reading short, it should read an open. If the meter was reading open it should read short.
5. If the switch has more than two terminals, consult the schematic or switch diagram to determine what terminals will be connected. The test is similar to testing a switch with two terminals.
   a. Place one meter lead on the common contact and the other on a different contact in the same circuit.
   b. Cycle through all positions of the switch. The meter should read short only when the switch connects the two terminals and open otherwise.
   c. If the switch has more than one common contact repeat the process for that circuit.

Limit Switches

Limit switches are used to control movement or indicate position. Mechanical limit switches are just like manually operated switches except that the moving object operates the switch. These switches can be tested the same way as a standard switch by manually operating the sensing arm.

Another type of limit switch used by JLG is the inductive proximity switch, also referred to as a "prox switch". Inductive proximity switches are actuated only by ferrous metal (metal that contains Iron, such as steel) near the switch. They do not require contact, and must be energized to actuate. These types of switches can be used to detect boom or platform position, for example. These switches have a sensing face where the switch can detect ferrous metal close to it. To find the sensing face, take note how the switch is mounted and how the mechanisms meet the switch. Test this type of switch as follows:

1. Remove prox switch from its mount.
2. Reconnect harness if it was disconnected for step 1, and turn on machine.
3. Hold switch away from metal and observe switch state in the control system diagnostics using the Analyzer. See vehicle or control system documentation on how to do this.
4. Place sensing face of switch on the object to be sensed by the switch. If that is not available, use a piece of ferrous metal physically similar to it. The switch state in the control system diagnostics should change.
5. When reinstalling or replacing switch be sure to follow mounting instructions and properly set the gap between the switch and object sensed.

Automatic Switches

If the switch is actuated automatically, by temperature or pressure for example, find a way to manually actuate the switch to test it. Do this either by applying heat or pressure, for example, to the switch. These switches may need to be energized to actuate.

1. Connect instrumentation to monitor and/or control the parameter the switch is measuring.
2. Observe switch state in control system with the Analyzer. See vehicle or control system documentation on how to do this.
3. Operate system such that the switch actuates. This could be going over a certain pressure or temperature, for example. The state indicated in the control system should change.

Switch Wiring - Low Side, High Side

When controlling a load, a switch can be wired between the positive side of the power source and the load. This switch is called a "high side" switch. The switch supplies the power to the load. When a switch is wired between the negative side of the power source and the load, it is a "low side" switch. The switch provides the ground to the load.

A low side switch will allow voltage to be present on the load. No power is applied because the switch is stopping current flow. This voltage can be seen if the measurement is taken with one test lead on the load and the other on the battery negative side or grounded to the vehicle. What is actually being measured is the voltage drop across the switch. This could mislead a technician into thinking the load is receiving power but not operating. To produce an accurate picture of power or voltage applied to the load, measure voltage across the load's power terminals. Also, the technician can measure the voltage at both power terminals with respect to battery ground. The difference between those two measurements is the voltage applied to the load.

Table 3-1. AC Unit - Troubleshooting

TROUBLE	PROBABLE CAUSE	REMEDY
Outrigger LED light does not turn on.		
	Outriggers are not properly inserted in outrigger sockets.	Check all outriggers for proper installation in outrigger sockets.
	Power source is OFF.	Check power source.
	Fuse(s) blown.	Check all insulating grommets on inter-lock contactors in base frame outrigger sockets and contactor plates on outrigger beams. Replace damaged grommet(s) and replace blown fuse.
	Check for loose wire(s) on contactor screws under outrigger sockets (causing an open circuit).	Properly reinstall wire to contactor screw per Figure 3-5. and instructions in Section 3.6, Outrigger Interlock Contacts.
	Contactor damaged.	Replace contactor.
	LED burnt out.	Replace LED.
	Pull pin on outrigger socket is damaged.	Replace pull pin.
Platform does not rise when the four LED's are ON and motor does not start.		
	Red emergency stop button is engaged (PUSHED IN) on either ground control station or on platform.	Disengage (TURN CLOCKWISE) red emergency button until it pops out.
	Control relay not functioning.	Replace control relay.
	Motor start relay not functioning.	Replace motor start relay.
	Unit wiring not properly grounded.	Check all grounds in the wiring.
Unit lowers by itself.		
	Manual descent valve open.	Close manual descent valve.
	Hydraulic hose and/or fittings loose causing a hydraulic pressure leak.	Tighten hydraulic hose and/or fittings.
	Lift DOWN solenoid valve not functioning.	Replace Lift DOWN solenoid valve.
Unit leaking hydraulic oil.		
	Hydraulic hose and/or fittings loose.	Tighten hydraulic hose and/or fittings.
	Valve and/or plug loose.	Tighten valve and/or plug.
	Breather cap on tank is saturated or clogged with oil.	Replace breather cap on tank.
	Hydraulic oil tank over-filled.	Lower oil level to full mark on dipstick.
Unit lowers very slowly.		
	Flow control valve not functioning.	Replace flow control valve.

Table 3-2. DC Unit - Troubleshooting

TROUBLE	PROBABLE CAUSE	REMEDY
Outrigger LED light does not turn on.		
	Outriggers are not properly inserted in outrigger sockets.	Check all outriggers for proper installation in outrigger sockets.
	Power source is OFF.	Check power source.
	Fuse(s) blown.	Check all insulating grommets on inter-lock contactors in base frame outrigger sockets and contactor plates on outrigger beams. Replace damaged grommet(s) and replace blown fuse.
	Check for loose wire(s) on contactor screws under outrigger sockets (causing an open circuit).	Properly reinstall wire to contactor screw per Figure 3-5. and instructions in Section 3.6, Outrigger Interlock Contacts."
	Contactor damaged.	Replace contactor.
	LED burnt out.	Replace LED.
	Pull pin on outrigger socket is damaged.	Replace pull pin.
Platform does not rise when the four LED's are ON and motor does not start.		
	Red emergency button is engaged (PUSHED IN) on either ground control station or on platform.	Disengage (TURN CLOCKWISE) red emergency button until it pops out.
	Control relay not functioning.	Replace control relay.
	Motor start relay not functioning.	Replace motor start relay.
	Unit wiring not properly grounded.	Check all grounds in the wiring.
Unit lowers by itself.		
	Manual descent valve open.	Close manual descent valve.
	Hydraulic hose and/or fittings loose causing a hydraulic pressure leak.	Tighten hydraulic hose and/or fittings.
	Lift DOWN solenoid valve not functioning.	Replace Lift DOWN solenoid valve.
Unit leaking hydraulic oil.		
	Hydraulic hose and/or fittings loose.	Tighten hydraulic hose and/or fittings.
	Valve and/or plug loose.	Tighten valve and/or plug.
	Breather cap on tank is saturated or clogged with oil.	Replace breather cap on tank.
	Hydraulic oil tank over-filled.	Lower oil level to full mark on dipstick.
Unit lowers very slowly.		
	Flow control valve not functioning.	Replace flow control valve.

3.6 OUTRIGGER INTERLOCK CONTACTS

Outrigger Socket and Outrigger Beam - Interlock Contacts

It is very important that the outrigger interlock contacts located on the bottom surface inside the outrigger sockets of the base frame, and the contactor plate on the bottom of each outrigger beam are installed correctly. These parts when installed properly will be insulated from (–) negative ground. Read the following steps and see Figure 3-5. for correct installation. Also see Troubleshooting Tables 3-1 & 3-2. for any reference to possible problems with interlock contacts.

Outrigger Socket - Contactor Screw Mounting Instructions

(See Figure 3-5.)

1. Install an insulating bushing into the holes (on the socket floor) inside of outrigger sockets in base frame.
2. Place one (1) #8-32UNC x 5/8 in. long contactor screw through each insulating grommet as shown in Figure 3-5.
3. Install two (2) #8 nylon washers onto contactor screw threads against insulating grommet, on the underside of the outrigger socket.
4. Apply Medium Strength Threadlocking Compound to screw threads.
5. Install one (1) standard #8 brass nut and thread in against nylon washer until insulating grommet just starts to compress.
6. Install wire end eyelet onto threaded end against previously installed brass nut.
7. Install second standard brass nut and thread tight against wire end eyelet.
8. While holding first brass nut, jam *(tighten)* second brass nut against wire end eyelet.

Outrigger Beam - Interlock Contactor Plate Mounting Instructions

(See Figure 3-5.)

1. Assemble an insulating bushing into each of the screw holes in the floor of the outrigger beam.
2. Locate the contactor plate and insert two (2) brass #8 - 32UNC x 3/4 in. long countersunk flathead screws through the contactor plate.
3. Install one (1) o-ring on one screw and stack two (2) on the other screw, slide o-rings in against contactor plate.
4. On the bottom of the outrigger beam slide the threads of brass screws *(with o-rings and contactor plate assembly)* through the insulating bushings. Install the screw with two (2) o-rings towards jack end of outrigger beam. Hold in place if necessary.

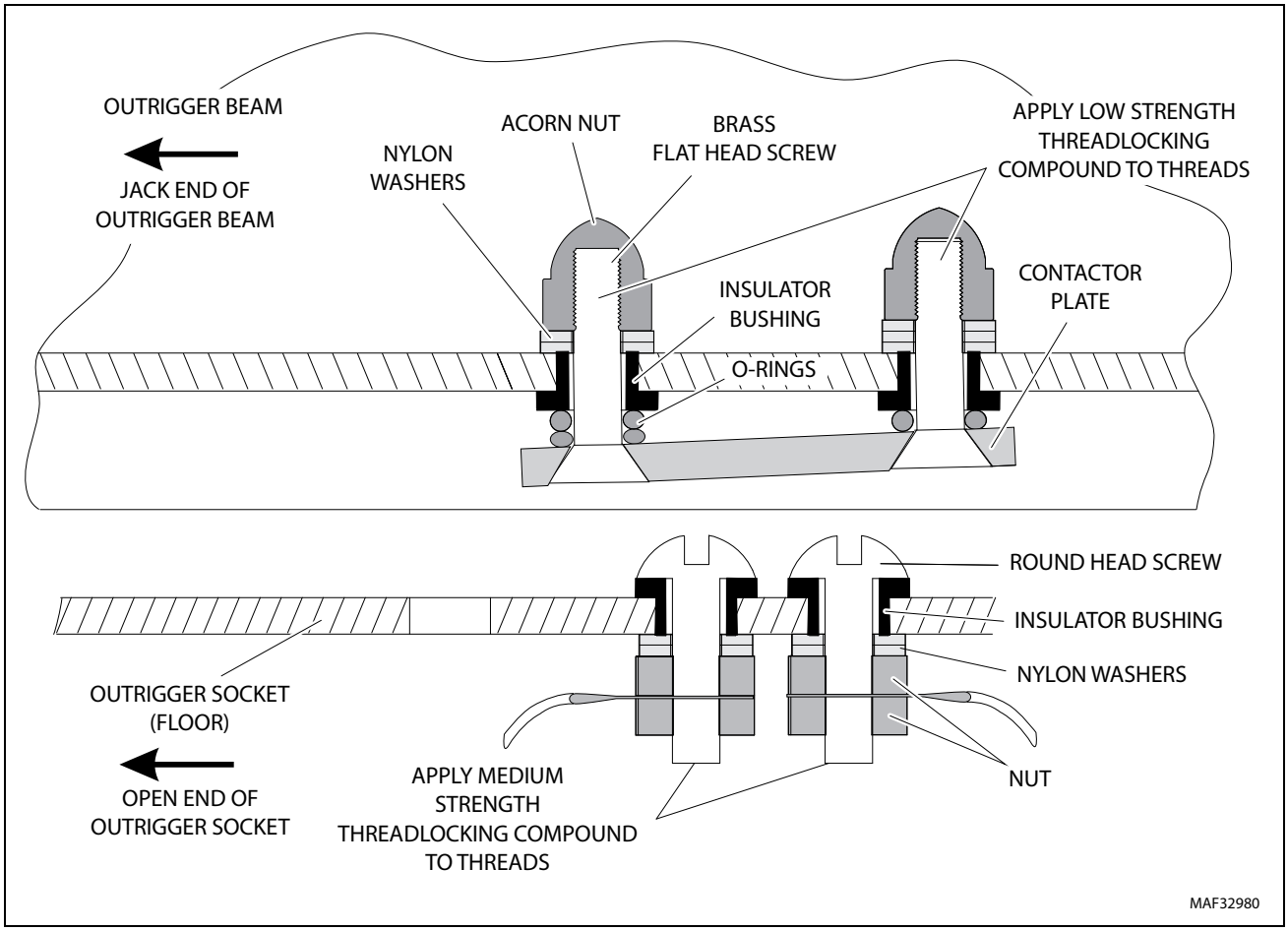

Figure 3-5. Outrigger Socket Contactor Heads and Outrigger Beam

1. On the inside of the outrigger beam, install two nylon washers on the screw with the two (2) o-rings installed *(one towards jack end)* and three (3) nylon washers on the other screw *(towards open end of beam)*.
2. Coat the threads of the screws with Low Strength Threadlocking Compound and thread the steel acorn nuts onto each screw. Hold the acorn nuts and tighten the screws using a cordless screw driver set at the #1 torque setting.

Detent Screws

(See Figure 3-5.)

OUTRIGGER BEAMS are manufactured with a series of holes drilled around the CONTACTOR PLATE assembly.

OUTRIGGER SOCKETS are equipped with button head screws *(detent screws)* mounted around the CONTACTOR SCREW HEADS on the floor of the outrigger socket. The detent screws must align with the holes in the outrigger socket before the contactor plate on the outrigger beam, and the contactor screw heads in the bottom of the outrigger socket can make contact to complete the interlock circuit.

The purpose of this design is to assure the proper size outrigger beams are used with their specific AM model to assure machine stability, i.e. the machine will not work with the incorrect outrigger assemblies.

3.7 HYDRAULIC SCHEMATIC

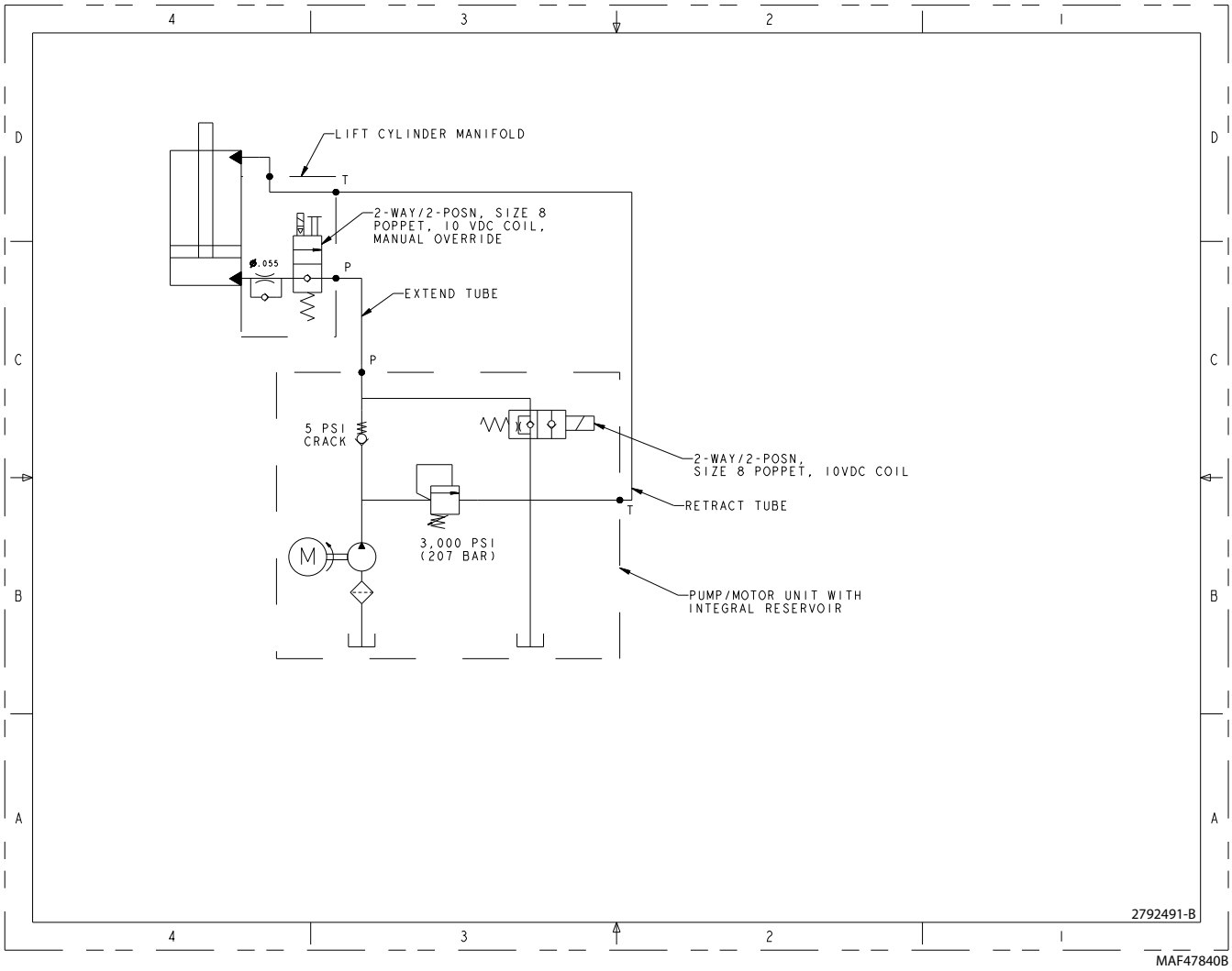

Figure 3-6. Hydraulic Schematic (AM Series) (2792491_B)

3.8 ELECTRIC SCHEMATIC

SHEET 2: 12V BATTERY PACK

CABLE, 16/5 303 in.

HARNESS, JUMPER (CONTROL BOX)

CABLE ASSEMBLY, BATTERY PACK

CABLE ASSEMBLY, DC PUMP

HARNESS, GROUND CONTROL, DC VERTICALS

HARNESS, LSS CONTROLS

HARNESS, AM BASE

SHEET 3: AC GROUND CONTROL W/ 120VAC POWER UNIT

HARNESS, GROUND CONTROL, AC VERTICALS

HARNESS, 120VAC

HARNESS, AC PLUG

CAPACITOR, 2200UF 50V

WIRE, HARNESS 12/3

WIRE, HARNESS 16/5

SHEET 4: AC POWER UNIT, 100VAC & 240VAC TRANSFORMER

HARNESS, 100VAC

HARNESS, 240VAC

HARNESS, AC PLUG

SHEET 5: MAST CABLES, 25AM/30AM/38AM

CABLE, RETRACTILE 16/5

CABLE, 16/5 DC CONTROL

HARNESS, DC CONTROL

HARNESS, DC CONTROL

HARNESS, DC CONTROL

CABLE, 12/3 ACC

HARNESS ACC CABLE

CABLE, 12/3 ACC

CABLE RETRACTILE 16/3

HARNESS ACC CABLE

SHEET 6: ACCESSORIES

HARNESS, HOURMETER

HARNESS, STROBE LIGHT

HARNESS, ALARM

HARNESS, SECURITY LOCK

1001248314-D

Figure 3-7. Electrical Schematic - Sheet 1 of 11

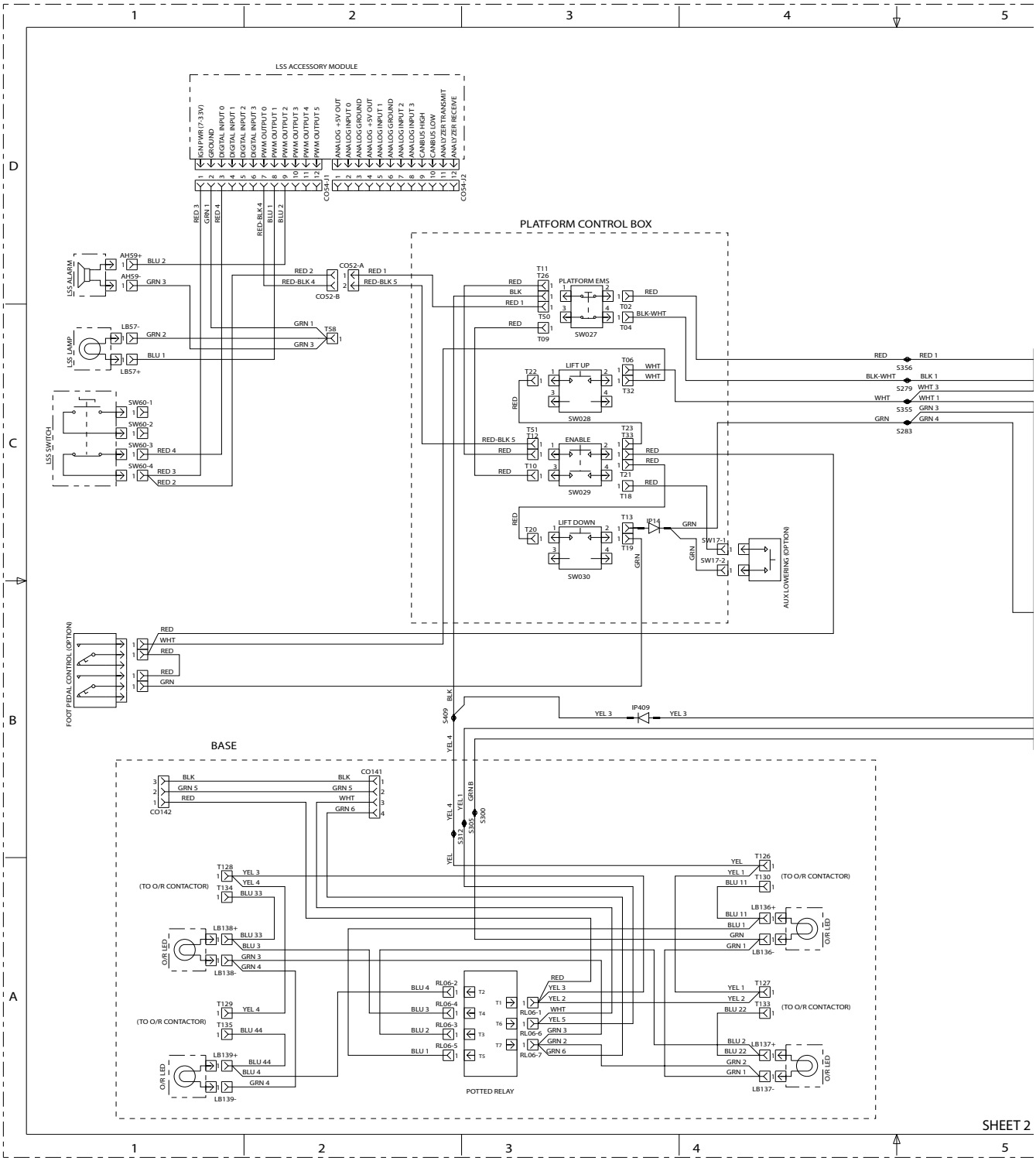

Figure 3-8. Electrical Schematic - Sheet 2 of 11

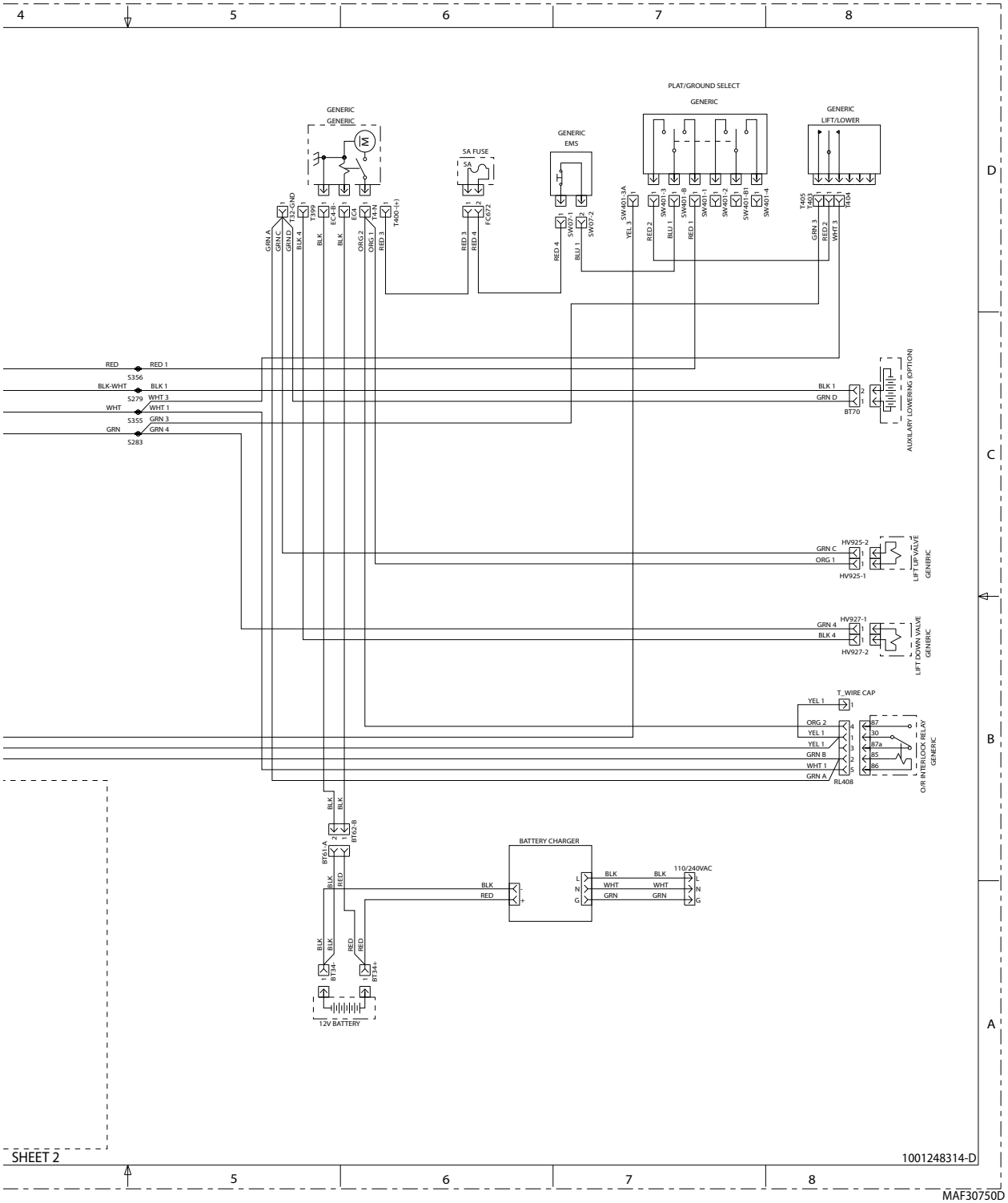

Figure 3-9. Electrical Schematic - Sheet 3 of 11

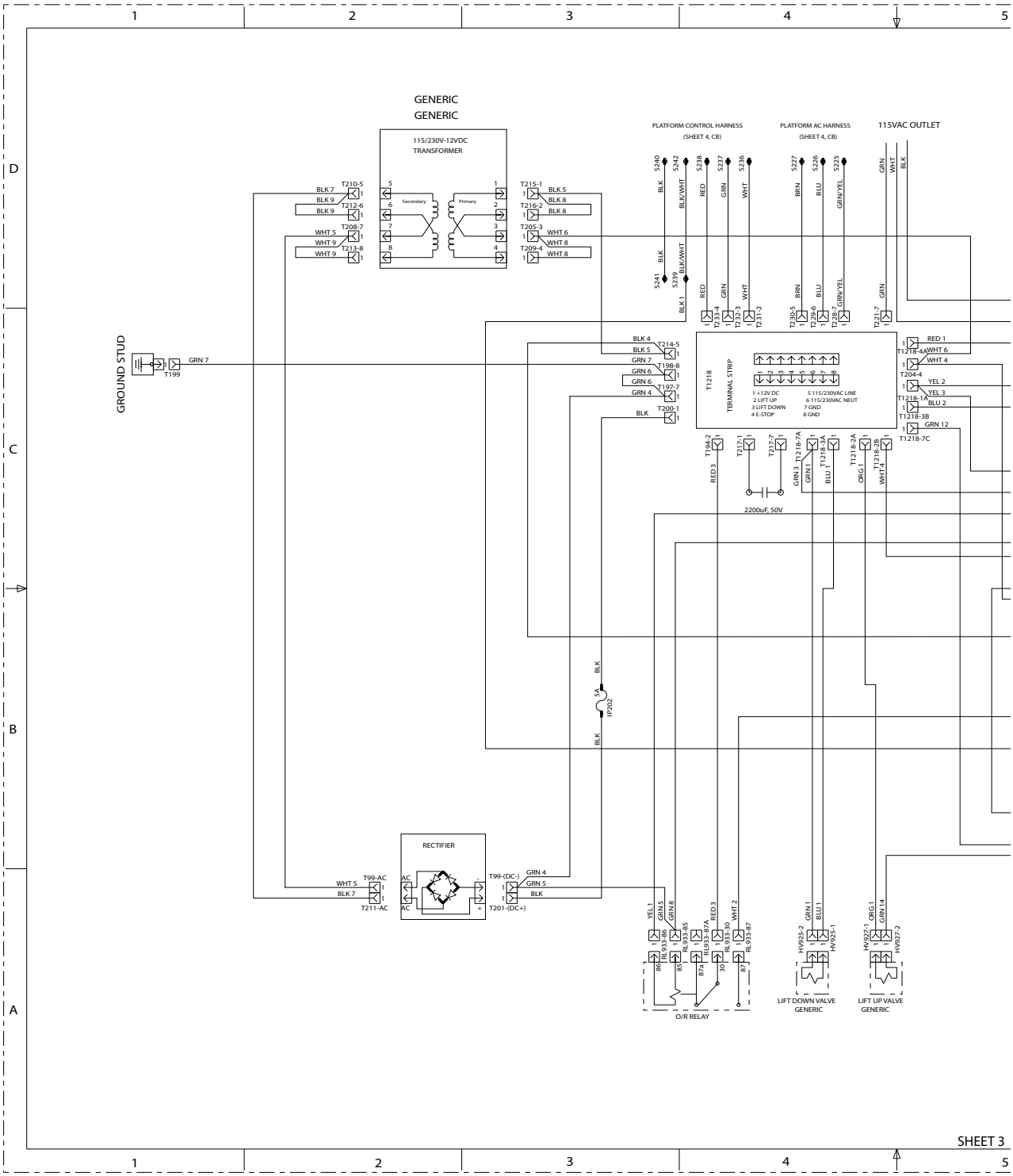

Figure 3-10. Electrical Schematic - Sheet 4 of 11

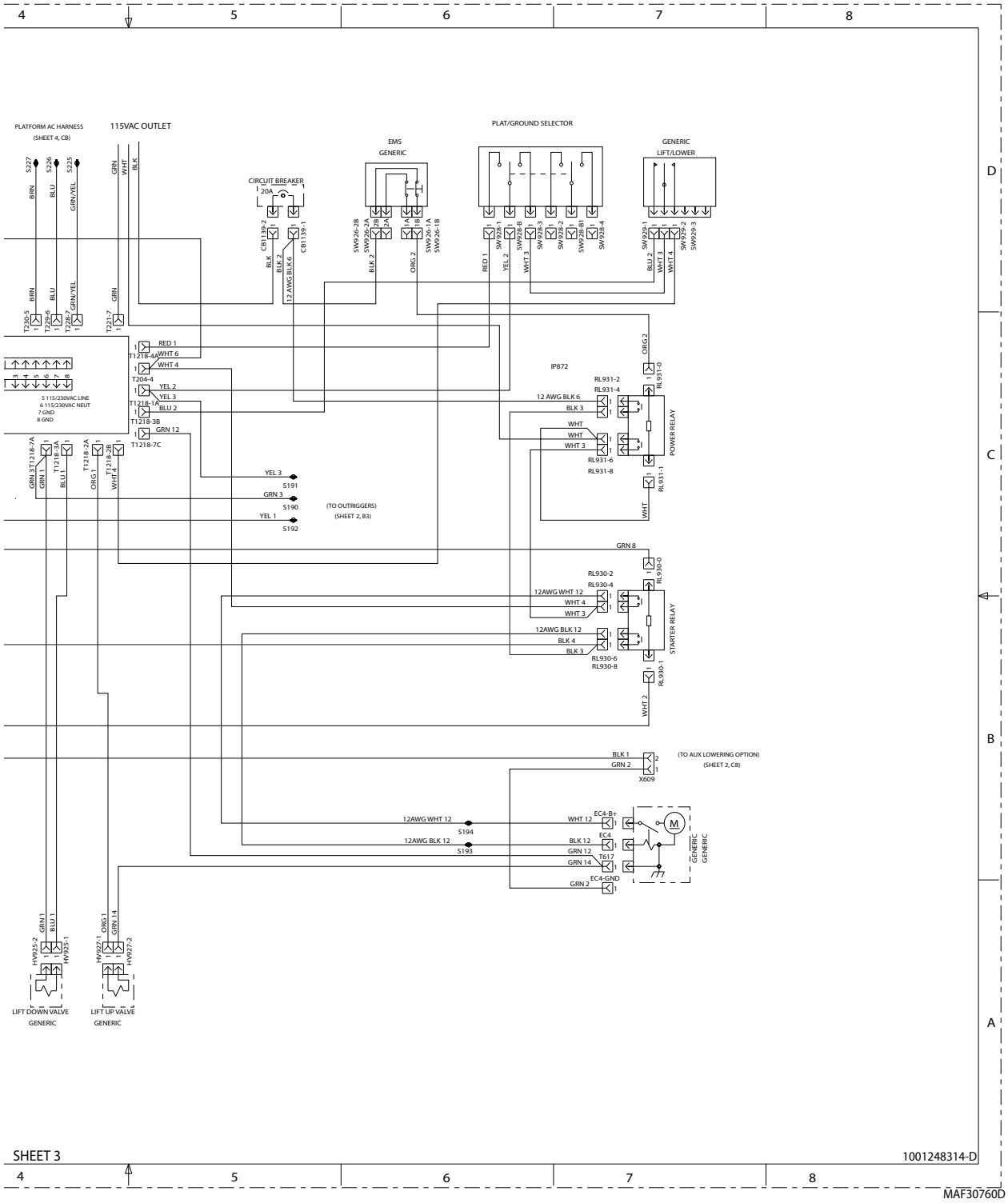

Figure 3-11. Electrical Schematic - Sheet 5 of 11

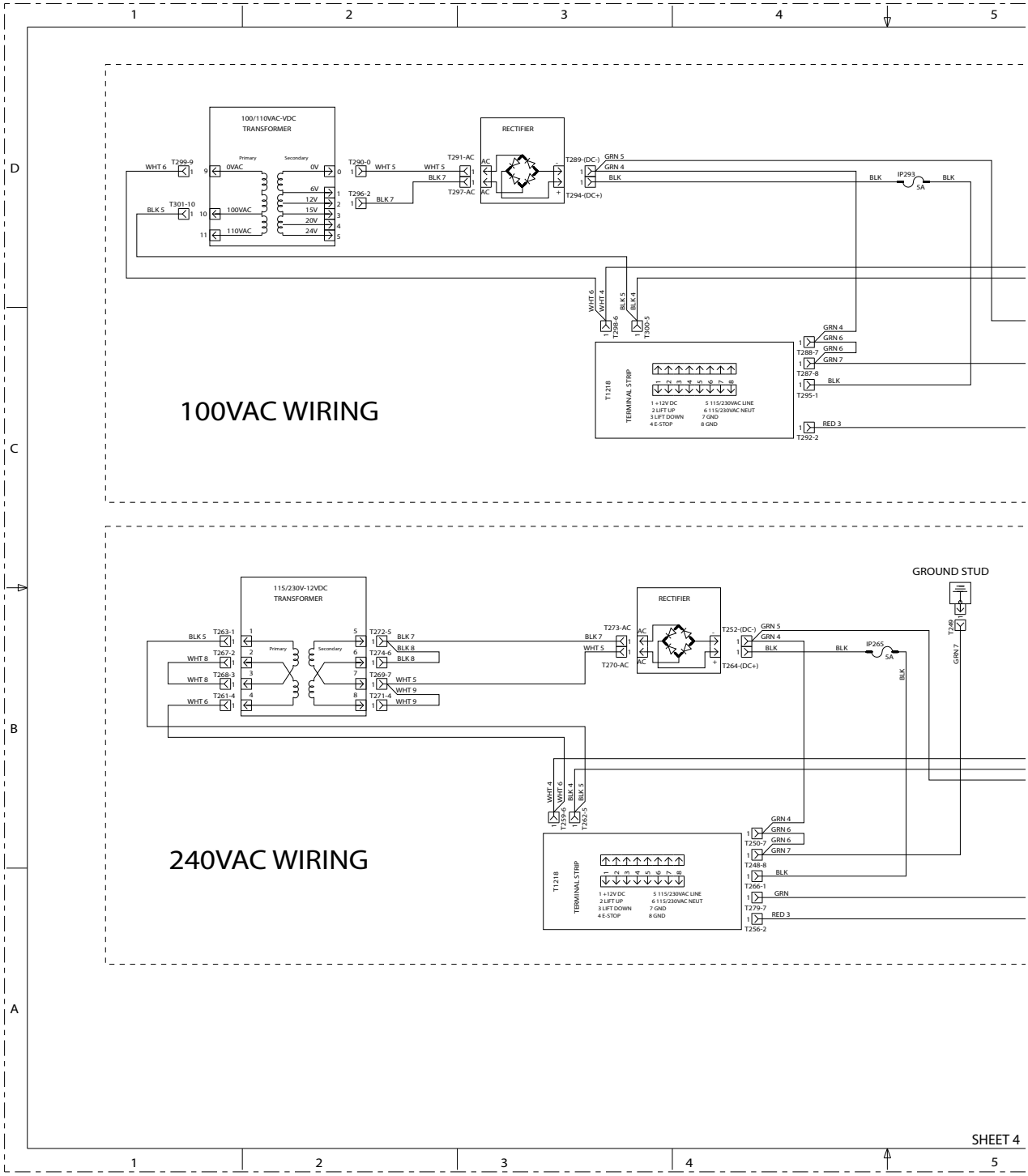

Figure 3-12. Electrical Schematic - Sheet 6 of 11

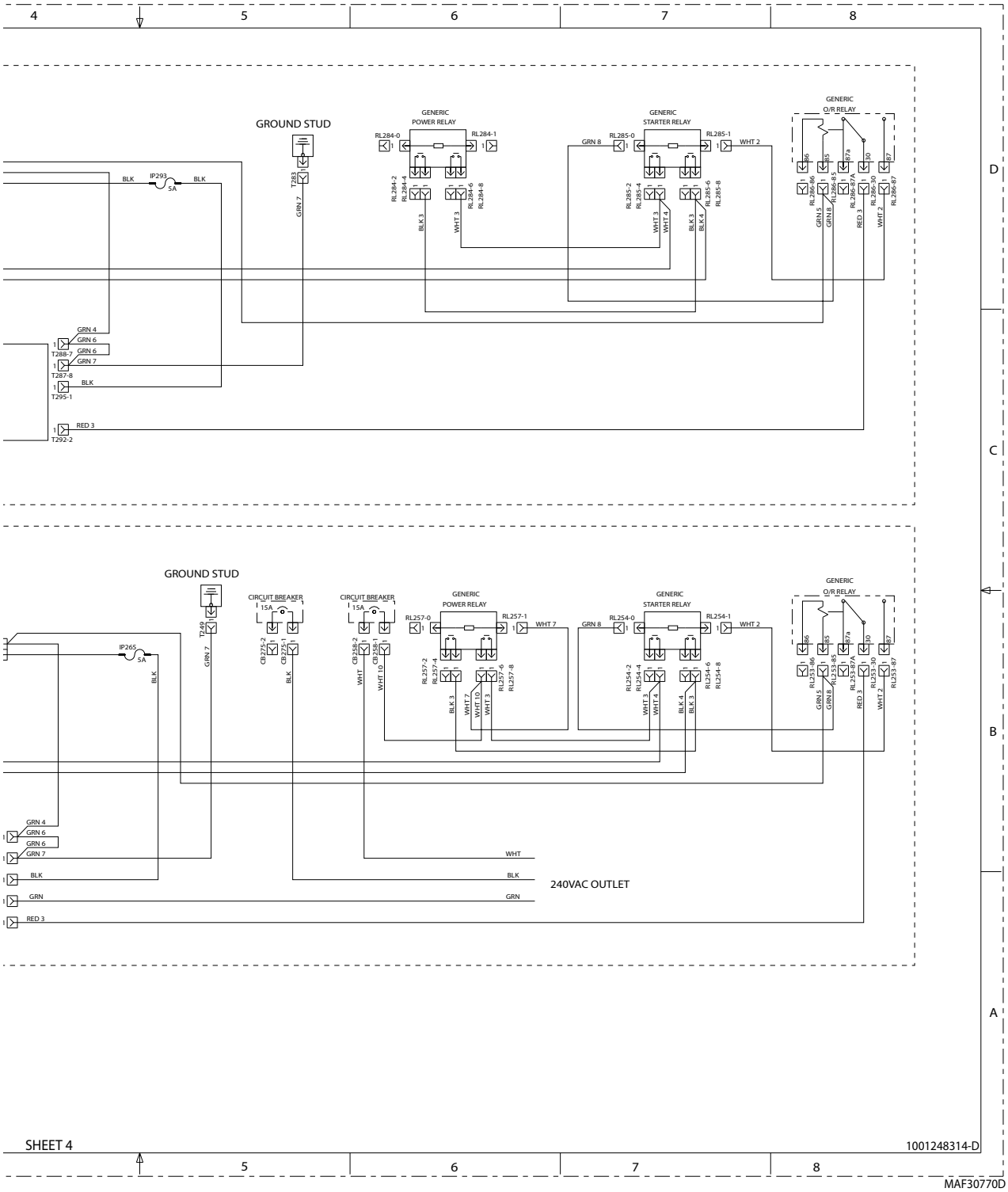

Figure 3-13. Electrical Schematic - Sheet 7 of 11

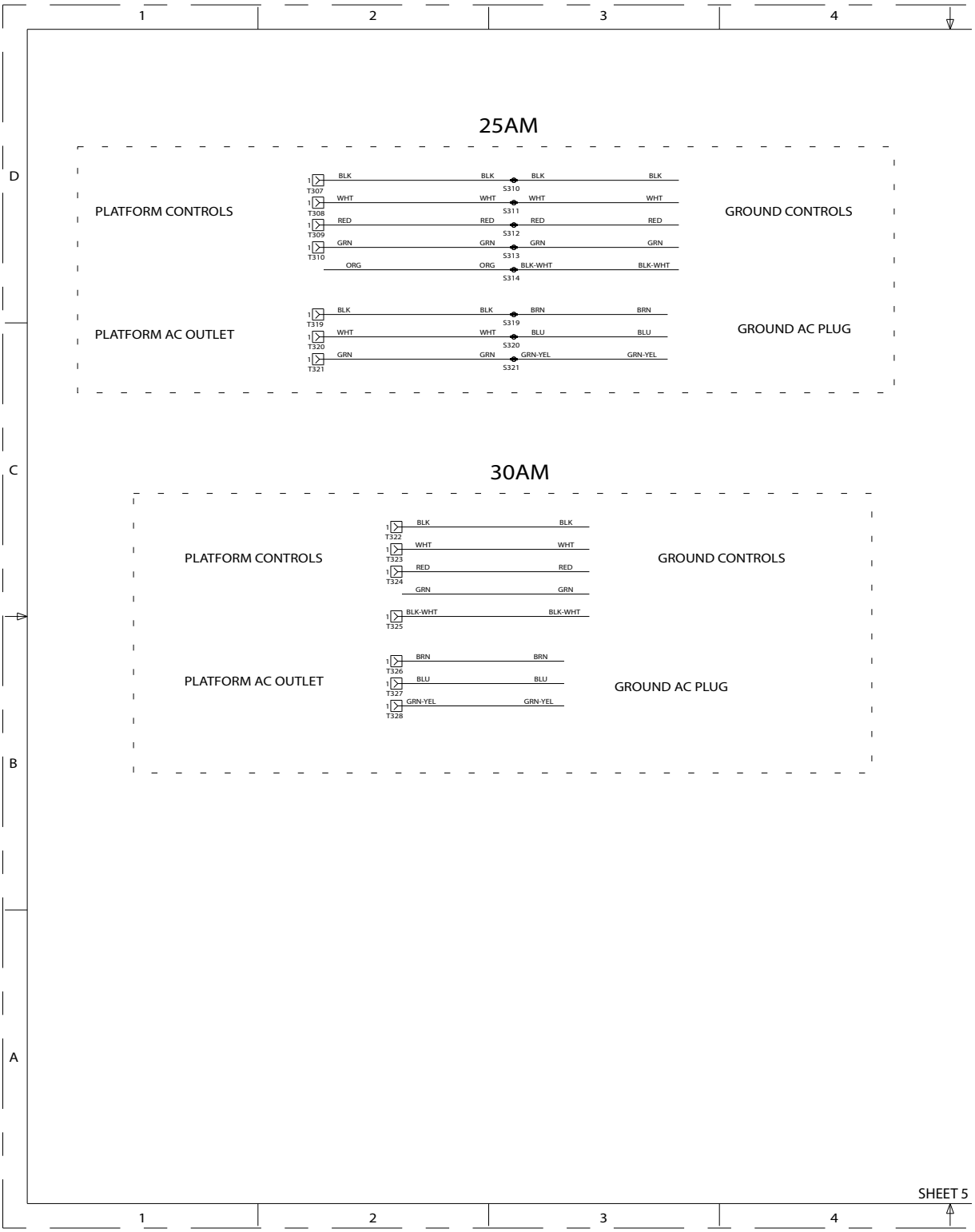

Figure 3-13. Electrical Schematic - Sheet 8 of 11

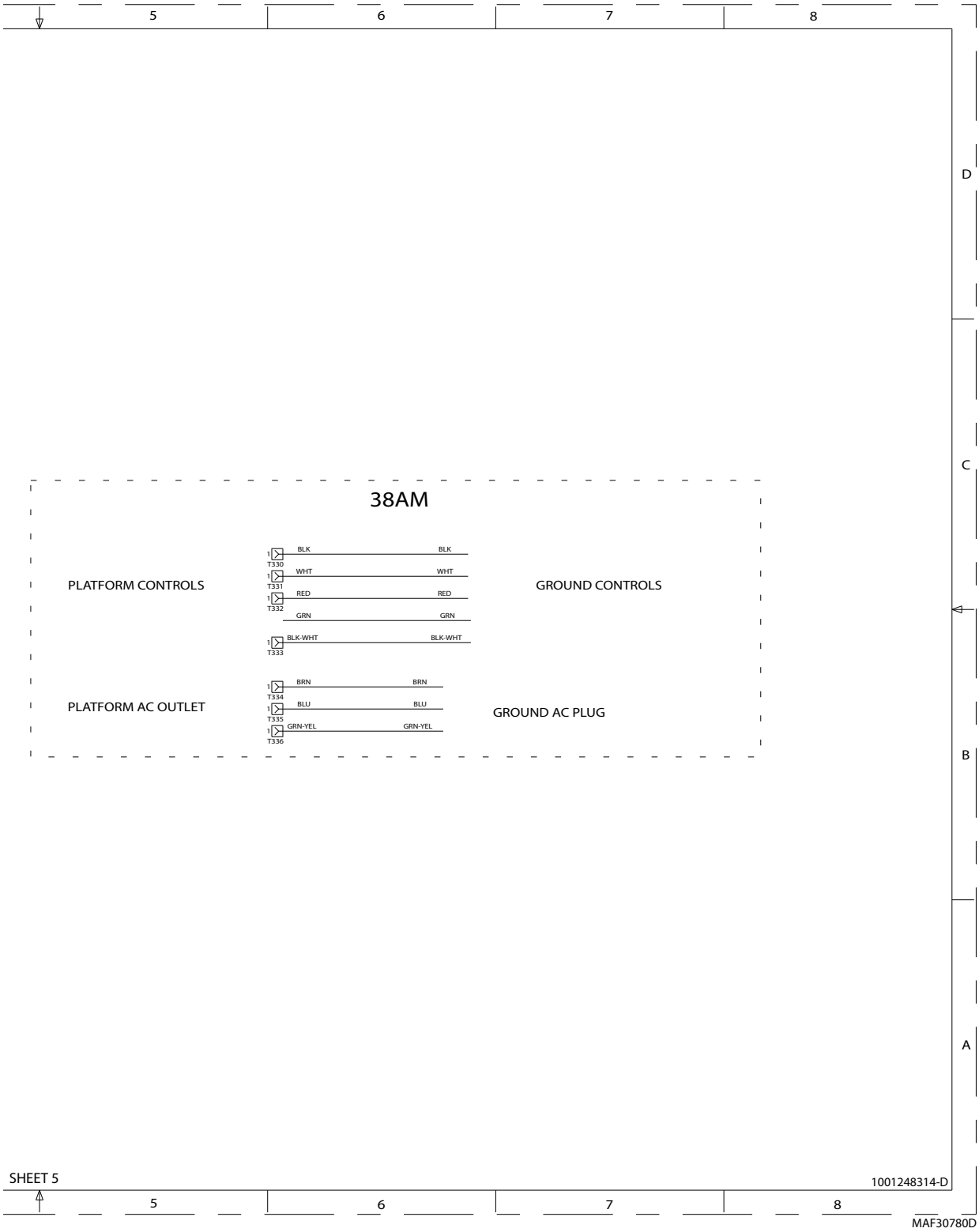

Figure 3-13. Electrical Schematic - Sheet 9 of 11

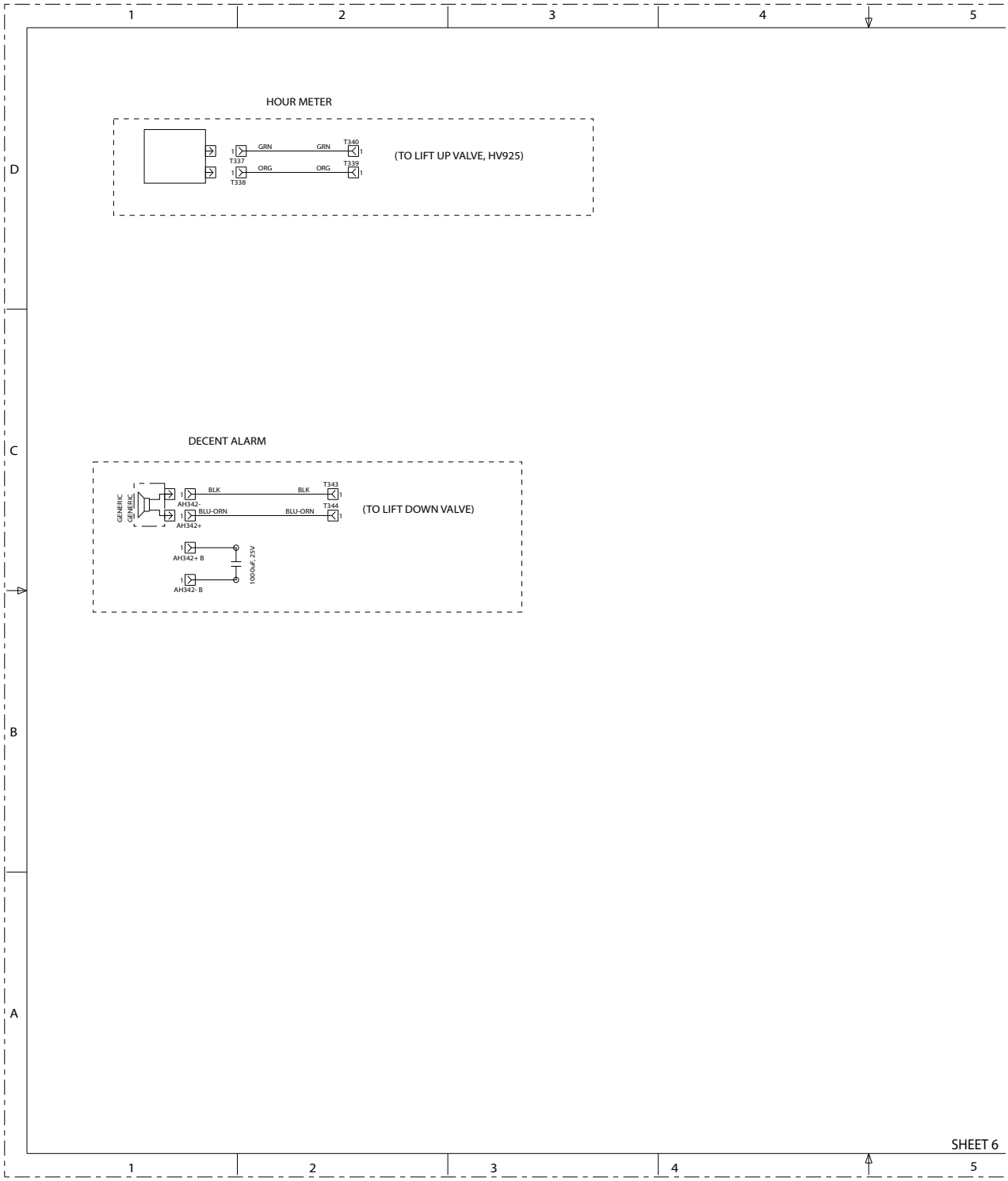

Figure 3-15. Electrical Schematic - Sheet 10 of 11

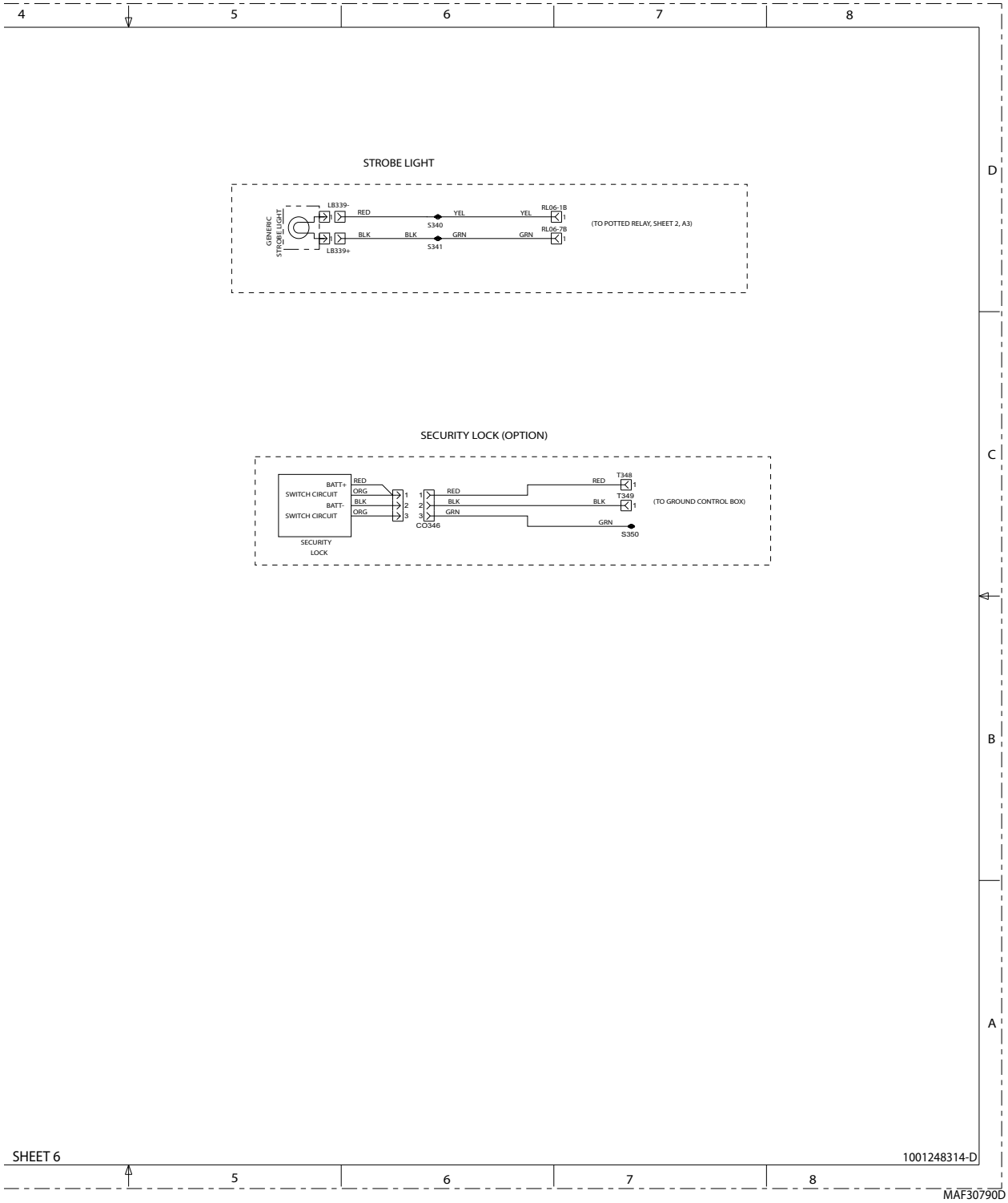

Figure 3-13. Electrical Schematic - Sheet 11 of 11

An Oshkosh Corporation Company

Corporate Office
JLG Industries, Inc.
1 JLG Drive
McConnellsburg, PA 17233-9533 USA
(717) 485-5161 (Corporate)
(877) 554-5438 (Customer Support)
(717) 485-6417

Visit our website for JLG Worldwide Locations.
www.jlg.com